microsonic

EVERY THING ULTRA SONIC

PRODUCT RANGE
ULTRASONIC SENSORS

microsonic

ULTRA MOBILE

PRODUCT CATALOGUE IN POCKET-SIZED FORMAT

For iOS:

For Android:

Always be up to date with our product catalogue as an app.

CONTENT

Nature as a model: in order to survive in the sea, dolphins use echolocation, a technique they have developed over millions of years.

From ideas to innovations

A natural phenomenon in the service of industry

Since the very beginning, humans and animals have used sound as an information medium and as a means of measurement. Bats can locate their position by means of ultrasound. Dolphins can detect shoals of fish and other objects underwater using ultrasonic frequencies of up to 120 kHz, and are even able to determine the heart rates of other animals. Probably the oldest type of sonic measurement used by human beings is counting the seconds between seeing a bolt of lightning and hearing the thunder in order to determine just how near a storm really is.

The idea of exploiting such measuring techniques – albeit very much refined – for industrial purposes led to the development of ultrasonic sensors. These emit high-frequency sound pulses, inaudible to the human ear, and measure the time taken by the signals to return after being reflected from an object. The robust sensors prove their capabilities in the most diverse applications, particularly through their ability to operate without any contact with the objects being measured or detected. This is even possible under extreme ambient conditions. Also impressive is their ability to accurately detect a vast range of different materials and colours.

It is exactly this huge potential variety of practical applications and the need to overcome traditional performance boundaries with product innovation that have driven microsonic for over 25 years. Since 1990, the internationally active company, headquartered in Dortmund, has concentrated on the development and production of innovative ultrasonic sensors for industrial automation technology.

The microsonic team at the opening ceremony of the new company headquarters

Our ultrasonic expertise gives you a head start

Concentrating on core skills

Today, microsonic is a globally recognised specialist in ultrasonic sensors for applications in industrial automation technology and industrial vehicles. A large number of patent applications and a constantly growing assortment of products are witness to the power of innovation at microsonic.

Examples are ultrasonic double-sheet control systems that work with no calibration at all, label sensors that use special Teach-in methods to be able to detect even critical labels and splices at high transport speeds, and ultrasonic proximity switches with switching frequencies of up to 250 Hz.

Certified quality

The objectives of microsonic's quality management have always been to deliver maximum product quality and to be fully in control of every single step in the process from development to full-scale production, and to provide verifiable documentation for those processes. The company's quality management system has been certified by the ICG Zertifizierung GmbH and complies with the international standard DIN EN ISO 9001.

Responding to customers and needs without ifs and buts

It is the aim of all employees at microsonic to respond quickly and flexibly to the wishes of our customers. Even when this results in a one-off for a particular company – a special length of cable, an individual software adaptation or a completely new development.

At microsonic, we always try to implement your wishes, requirements and ideas as rapidly as possible. We regard them as the prime movers for further progress in terms of development, production, sales and service.

People are responsible for quality.

The ultrasonic principle: Where high performance sounds good

Ultrasonic sensors have set new standards in automation.

Ultrasonic sensors emit short, high-frequency sound pulses at regular intervals. These propagate in the air at the velocity of sound. If they strike an object, then they are reflected back as echo signals to the sensor, which itself computes the distance to the target based on the time between emitting the signal and receiving the echo.

As the distance to an object is determined by measuring the time of flight and not by the intensity of the sound, ultrasonic sensors are excellent at suppressing background interference.

Virtually all materials that reflect sound can be detected, regardless of their colour. Even transparent materials or thin foils represent no problem for an ultrasonic sensor.

microsonic ultrasonic sensors are suitable for target distances from 20 mm to 10 m, and as they measure the time of flight, they can take a measurement with pinpoint accuracy. Some of our sensors can even resolve the signal to an accuracy of less than 0.025 mm. Ultrasonic sensors can see through dust-laden air and ink mists. Even thin deposits on the sensor membrane do not impair its function.

Sensors with a blind zone of only 20 mm and an extremely thin beam spread are making entirely new applications possible today: fill level measurement in wells of micro-titre plates and test tubes, as well as the detection of small bottles in the packaging industry, can be implemented with ease. Even thin wires are reliably detected.

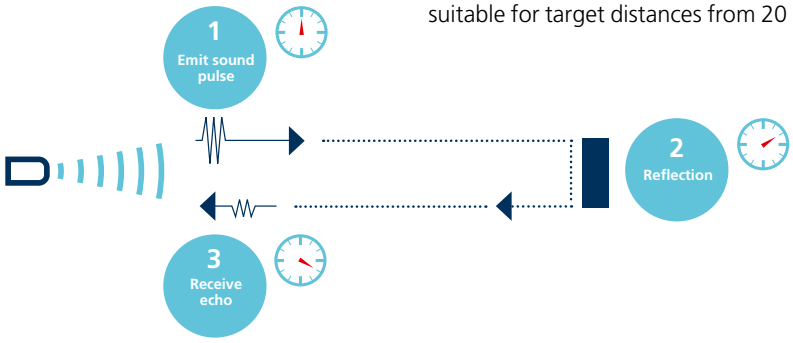

Fluids

Clear water or black coffee – the ultrasonic sensor registers virtually all liquids.

Colour

Ruby red, steel blue, lemon yellow...
What's your favourite colour?
The ultrasonic sensor loves them all.

Missing contrast

White on white, black on black?
No problem for the ultrasonic sensor.

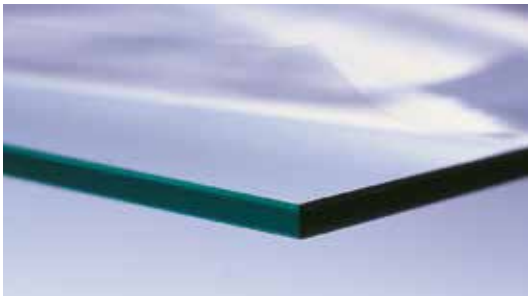

Transparency

Sheets of glass and skin-thin foils – the ultrasonic sensor detects them all reliably.

Textiles

Velvet and leather – almost all fabrics can be detected.

Filling-level control

Coarse grains, chips or fine sand – when it comes to level control, the ultrasonic sensor is unbeatable.

The right solution for every application

The ultrasonic sensor in reflective mode (proximity switch)

represents the classic method of operation. It exploits its background interference suppression which is superior to other sensing principles. Here, the switch is activated as soon as the target is located within the preset detect point. The detect point is coupled with a hysteresis.

This operating mode is suitable for, e.g. counting items on a conveyor belt or for presence detection. The overview table for distance measurement sensors lists all the sensor types that can work in reflective mode.

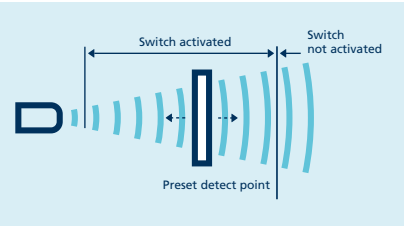

The window mode

is an extension of the reflective mode. In this case the switch is only activated when the target is located within a window defined by two window limits. This can be used to monitor, for example, correct bottle sizes in a crate – taller and shorter bottles are rejected.

Window mode and also two-way or reflective ultrasonic barriers can be based on all ultrasonic sensors that support microsonic Teach-in.

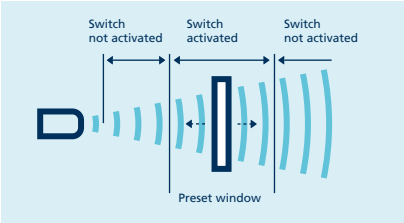

The two-way or reflective ultrasonic barrier

operates in a similar way as a photoelectric barrier. However, in contrast to the photoelectric barrier, no special triple reflector or similar device is needed. Any reflector, e.g. a metal flag, is adequate. In this case, the ultrasonic sensor is set up in window mode in such a way that the fixed reflector lies within the window. The two-way reflective ultrasonic barrier supplies a signal as soon as an object completely obscures the reflector. It does not matter whether the target absorbs all the sound or even "deflects" it. Therefore, this operating mode is used for foams and other materials, that are difficult to detect, as well as scanning objects with irregular surfaces.

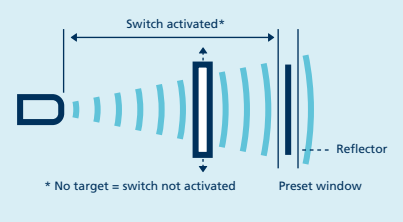

Definitions

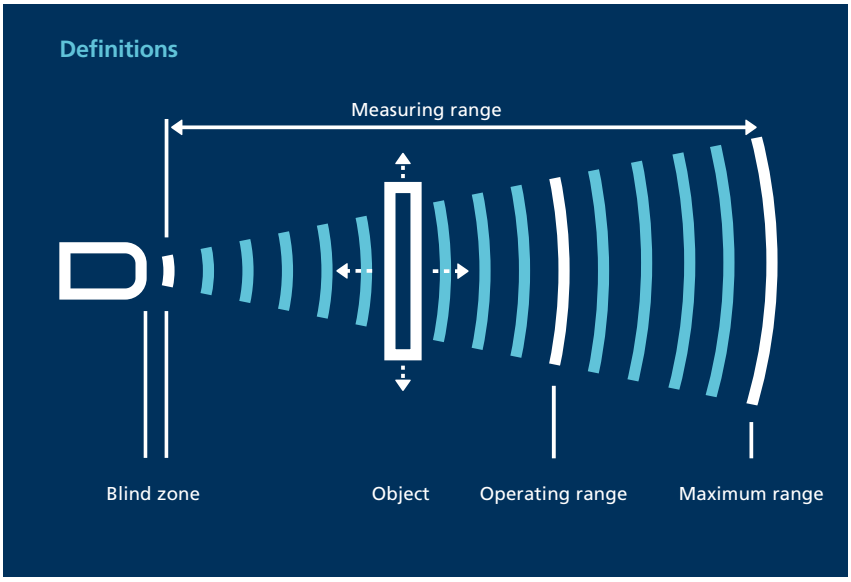

Applications


Robotic sensing


Crate inspection


Quality control


Monitoring filling level in 6 bar overpressure

The ultrasonic sensors with analogue output

transmit the measurement as a proportional voltage (0–10 V) or current (4–20 mA). For ultrasonic sensors with analogue output, the near and far window boundary of the analogue characteristic and also whether the characteristic is rising or falling can be configured. Depending on the sensor type and window width, resolution lies between 0.025 and 2.4 mm.

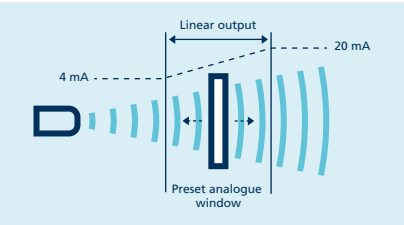

The ultrasonic sensors with IO-Link

permit continuous communication on all levels of the system architecture, from the sensor to the upper field bus level. The distance value measured is transmitted to the controller in bit serial form.

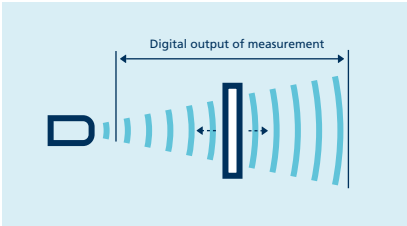

Also see: IO-Link in detail (next page)

The ultrasonic double-sheet controls

operate as a one-way barrier and detect two or more sheets inadvertently stuck together. The transmitter-receiver arrangement can scan papers, films, cardboard and thin sheet metal. Signal outputs are available for indicating double and missing sheets.

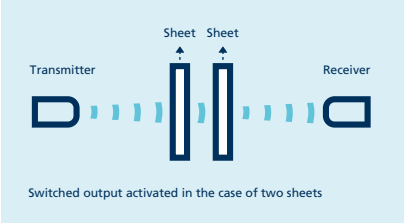

The ultrasonic label and splice sensors

work on the same principle as ultrasonic double-sheet controls. Since the interior adhesion of the labels to the backing material represents a joint without a separating air layer, label sensors must be calibrated to the backing material and the labels.

The ultrasonic edge sensors

are designed as fork sensors and work as one-way barriers. They are used for contact-free web edge control and emit an analogue signal of 0–10 V or 4–20 mA which is proportional to the orientation of the path edge.


People detection


Positioning


Height and width measurements


Path edge control


Loop control


Monitoring of trays


Wire break detection


Stacking-height control


Filling-level monitoring


Diameter checking


Foil monitoring


Presence detection

IO-Link: the new standard at the field bus level

The IO-Link interface in our ultrasonic sensors gives you everything you need to implement continuous communication on all levels of the system architecture, right down to the sensor. IO-Link can enormously simplify the startup and maintenance of either a machine or plant.

Functional principle

Following every switch-on, the sensor is in SIO mode (Standard-Input-Output mode) and functions just like any normal ultrasonic proximity switch with Push-Pull output stage.

With the wake-up signal, an IO-Link-enabled controller can transfer the ultrasonic sensor into the communication or IO-Link mode. The controller can now exchange both process and service data with the device.

An IO-Link master can have one or a number of inputs and outputs. Only one IO-Link device is attached at each input/output. A standard three wire cable joins up the sensors and actuators. This non-shielded line can be up to 20 metres in length. Mixed operation is possible thanks to complete compatibility with SIO mode: at a master, a number of sensors and actuators can be run in the IO-Link and others in the SIO mode.

Example of the system architecture

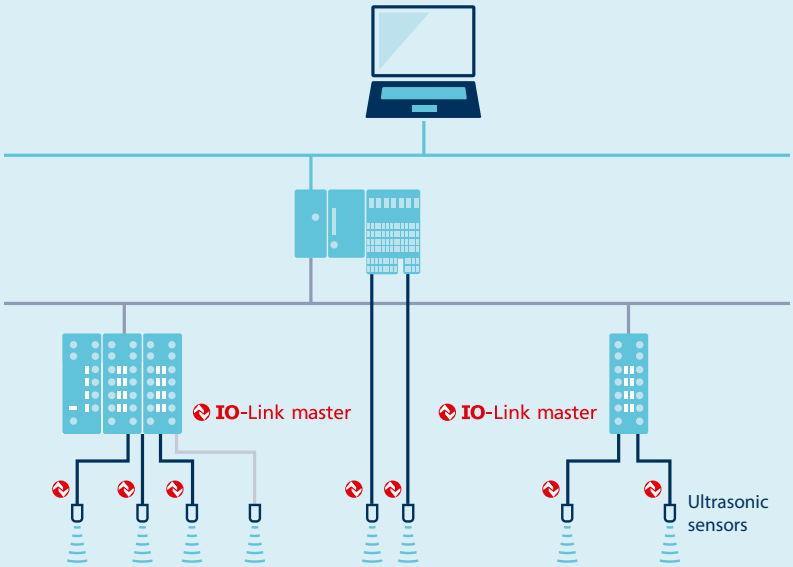

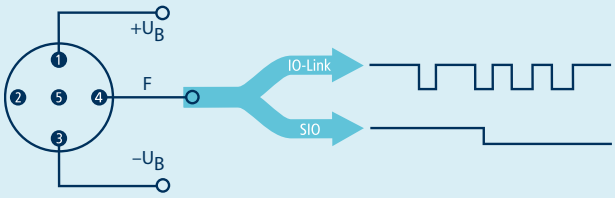

Push-Pull output stage permits switching from SIO mode to IO-Link mode.

The advantages of IO-Link

- In IO-Link, the distances measured are cyclically transmitted to the master; thus the IO-Link mode can replace an analogue output at no significant expense.
- Following a sensor failure, the controller can automatically reload all the settings into the new sensor.
- Reduction in planning outlay achieved from a standardised integration of devices into the controller via a manufacturer-independent IODD description file.
- Reduced startup times thanks to a centralised provision of data and parameters in the controller.
- Greater equipment availability levels coming from maximum transparency and system-wide diagnosis all the way down into the device itself.

Continuous communication permits process/service data to be transmitted between sensors/actuators and the controller.

An IO-Link system consists of IO-Link devices – mainly sensors, actuators or combinations of them – a standard three wire sensor/actuator cable and an IO-Link master.

IO-Link

More information on IO-Link can be found at www.io-link.com.

Installation instructions for ultrasonic sensors

Notes for installation and operation

Ultrasonic sensors can be incorporated and operated in any position. However, positions that could lead to severe soiling of the sensor surfaces should be avoided. Drops of water and severe deposits on the surface of the transducer can impair functionality. However, small dust deposits and splashes of paint do not affect functionality.

For scanning objects with flat and smooth surfaces, the sensors should be mounted at an angle of 90° ±3° to the surface.

On the other hand, rough surfaces can cope with much larger angular deviations. In terms of ultrasonics, a surface is considered rough when its peak-to-valley height is in the order of magnitude of the wavelength of the ultrasonic frequency or is larger than this.

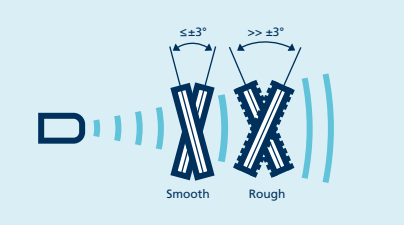

The sound is then reflected in a scattered fashion and this can lead to a shortening of the operating range. In the case of rough surfaces, the maximum permissible angular deviation and the maximum possible detection range should be determined by way of trials.

Sound-absorbent materials, e.g. cotton wool or soft foams, can reduce the operating range. On the other hand, liquids and solid materials are very good reflectors of sound.

Mounting spacing and synchronisation

If two or more sensors are mounted too close to one another, they can influence one another. To avoid this, either the mounting spacing must be sufficiently large, or the sensors must be synchronised with one another. The following table lists the minimum mounting distances between unsynchronised sensors.

Operating range	A	B
0.07 m	≥ 0.25 m	≥ 1.10 m
0.15 m	≥ 0.25 m	≥ 1.30 m
0.24 m	≥ 0.25 m	≥ 1.40 m
0.25 m	≥ 0.35 m	≥ 2.50 m
0.35 m	≥ 0.40 m	≥ 2.50 m
0.7 m	≥ 0.70 m	≥ 4.00 m
1.0 m	≥ 0.70 m	≥ 4.00 m
1.3 m	≥ 1.10 m	≥ 8.00 m
3.4 m	≥ 2.00 m	≥ 18.00 m
6.0 m	≥ 4.00 m	≥ 30.00 m

The mounting distances should be regarded as recommended values. In the case of objects positioned at an angle, the sound can also be "reflected" to an adjacent sensor. Minimum mounting distances should then be determined by way of trials.

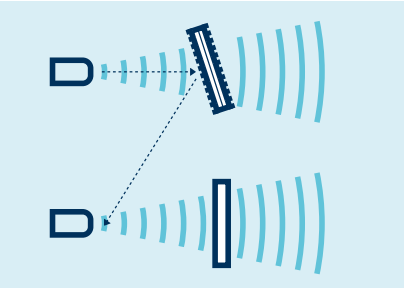

If sensors are mounted at distances from one another that are less than the values specified in the table, the ultrasonic sensors must be synchronised with one another. This means that the sensors always carry out their measurements at the same time.

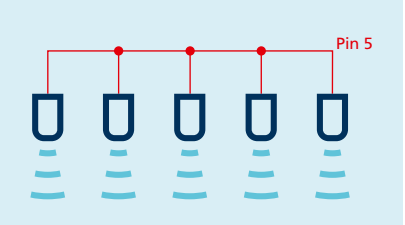

Many microsonic sensors have integrated synchronisation, which can be activated for example simply by connecting to pin 5 on the device connector. Other sensors require an external clock signal.

Redirecting the sound

The sonic beam can be redirected via a reverberant, smooth reflecting surface without significant losses. Accessories are available to deflect the sound through 90°.

These can be used to advantage in certain confined installations.

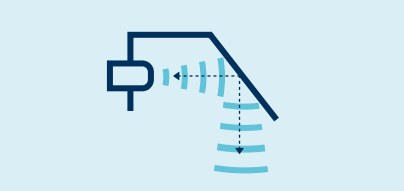

Accuracy

The (absolute) accuracy is the discrepancy between the real distance between sensor and object and the distance as measured by the sensor. The accuracy obtainable depends on the reflective properties of the object and the physical influences affecting the velocity of sound in air.

Objects with poor reflective properties or a surface roughness greater than the wavelength of the ultrasonic frequency have an adverse effect on the accuracy achievable. It is not possible to quantify this exactly but as a rule of thumb we can assume an inaccuracy of several wavelengths of the ultrasonic frequency employed.

Air temperature

The biggest influence on the velocity of sound, and hence on the accuracy, is the temperature of the air (0.17 %/K). Therefore, the majority of ultrasonic sensors from microsonic contain temperature compensation circuitry. Even better is to carry out a comparative measurement over a known distance to determine the influence of temperature. With temperature-compensated sensors, an accuracy of ≤ ±1 % can be achieved.

Air pressure

The velocity of sound over a wide range does not depend on the pressure of the air. microsonic has special sensors for measuring distances in up to 6 bar overpressure.

Relative humidity

In comparison to the influence of temperature, the effect of the humidity of the air on the accuracy can be ignored.

Repeat accuracy R

The repeat accuracy, or reproducibility, describes the deviation in the measured distances under the same conditions over a defined period.

The repeat accuracy of microsonic sensors is better than ±0.15 %.

Always meeting the standard

DIN EN 60947-5-2	Low-voltage switch- and control gear: proximity devices with switching output
DIN EN 60947-5-7	Low-voltage switch- and control gear: proximity devices with analogue output
DIN EN 61000-4-2	EMC: electrostatic discharge immunity test
DIN EN 61000-4-3	EMC: radio-frequency electromagnetic field immunity test
DIN EN 61000-4-4	EMC: electrical transients/burst immunity test
EN 55011	Limits and methods of measurement of radio disturbance characteristics of ISM radio-frequency equipment
IEC 60068-2-6	Environmental testing – test Fc: vibration
IEC 60068-2-27	Environmental testing – test Ea and guidance: shock
EN 60529	Degrees of protection provided by closures (IP code)

All sensors comply with the requirements of German national (DIN) and European (EN) standards.

The detection zones of ultrasonic sensors

The most important criterion

to bear in mind when selecting an ultrasonic sensor is its detection range and the associated three-dimensional detection zone.

In measuring the sensors, various standard reflectors are introduced into the detection zones from the side, and the points at which these reflectors are detected by the sensor are marked.

The red areas

are determined with a thin, round bar (10 or 27 mm diameter depending on type of sensor) and indicate the typical operating range of a sensor.

In order to obtain the blue areas,

a plate (500 × 500 mm) is introduced into the beam spread from the side. In doing so, the optimum angle between plate and sensor is always employed. This therefore indicates the maximum detection zone of the sensor. It is not possible to evaluate ultrasonic reflections outside the blue beam spread.

A reflector with reflective properties inferior to those of the round bar can be detected in a zone that is smaller than that indicated by the red area. On the other hand, a reflector with better reflective properties will be detected in a zone with a size somewhere between that of the red and blue areas.

A sensor's blind zone determines its smallest permissible detection range. No objects or disturbing reflectors should be placed in the blind zone because this can lead to incorrect measurements.

Objects may be introduced into the detection zone from any direction.

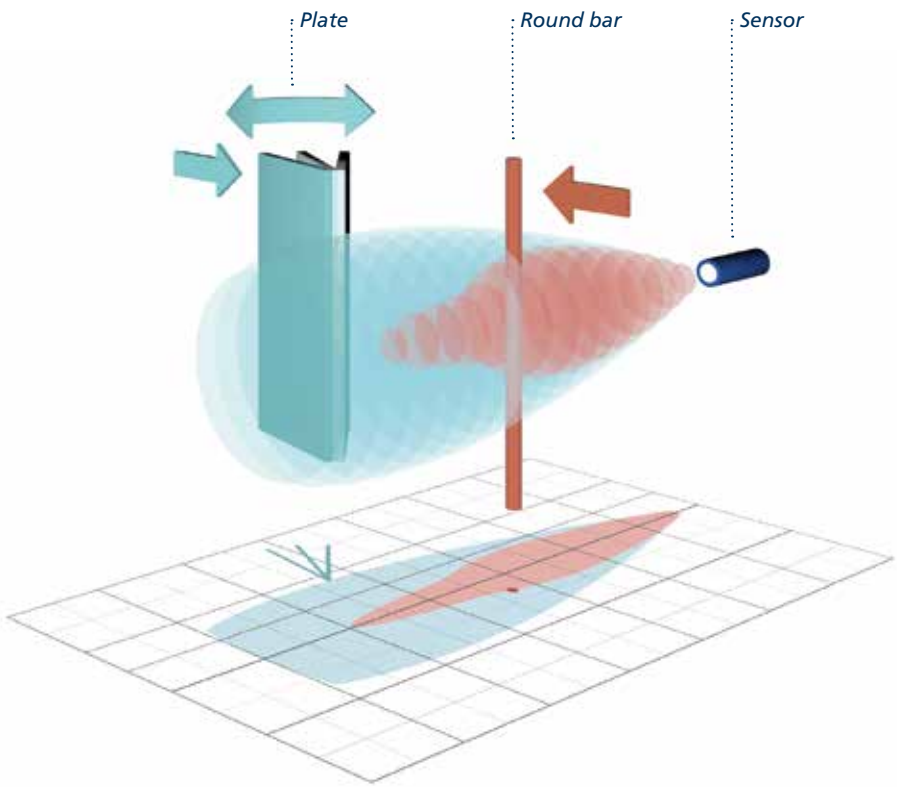

Method for determining detection zones

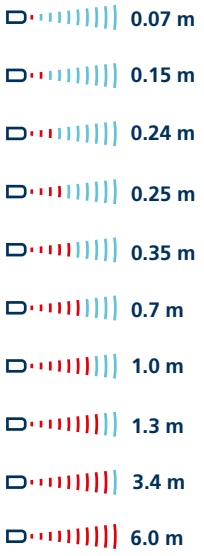

These symbols in the technical data show the operating ranges of microsonic ultrasonic sensors.

The operating ranges given in the diagrams specify the distance at which the ultrasonic sensor can measure common reflectors with sufficient operating reserve. The sensor can also be employed for distances up to its maximum range in the case of good reflectors. The maximum detection range is always greater than the operating range. The diagrams apply for 20°C, a relative humidity of 50 % and normal pressure.

The attenuation of sound in the air depends on the temperature and pressure of the air as well as its relative humidity. The physical relationships are complex and have different effects at different ultrasonic frequencies.

For simplicity, we can say that the attenuation in the air increases with rising temperature and rising humidity. This necessitates a reduction in the size of the detection zones.

With a lower relative humidity and falling temperatures, the attenuation in the air decreases and the detection zones enlarge accordingly.

The reduction in the size of the detection zone is essentially compensated for by the sensor's operating reserves. And at temperatures below 0 °C some sensors can operate over distances certainly twice as large as those given here.

As the pressure of the air rises, the attenuation in the air drops considerably. This aspect should be taken into account for applications involving overpressure. Sound propagation is impossible in a vacuum.

0.15 m

› 20 mm blind zone
› 150 mm operating range
› 250 mm maximum range
› f = 380 kHz, λ = 0.9 mm

Used in the following product groups:

pico+ | lpc+ | nero | nano | zws | sks | ucs | pms | pico+TF

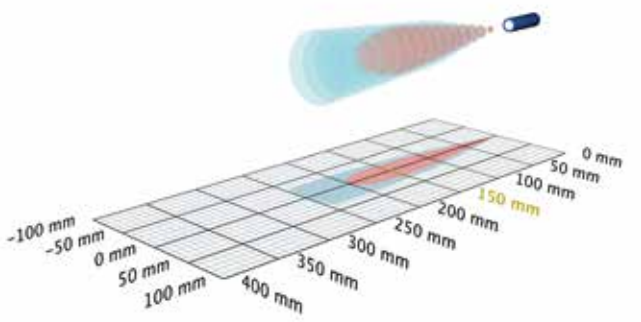

0.24 m

› 50 mm blind zone
› 240 mm operating range
› 350 mm maximum range
› f = 500 kHz, λ = 0.7 mm

Used in the following product groups:

nano | zws | ucs

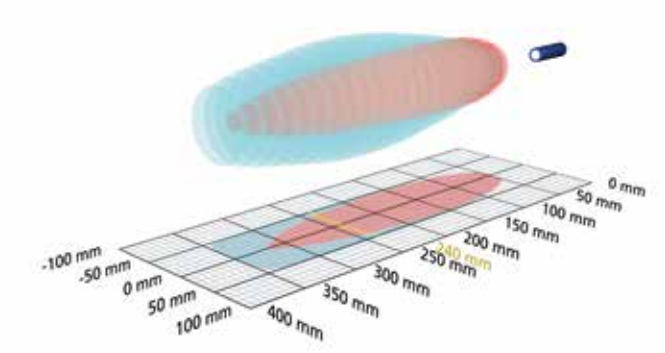

0.25 m

› 30 mm blind zone
› 250 mm operating range
› 350 mm maximum range
› f = 320 kHz, λ = 1.1 mm

Used in the following product groups:

mic+ | mic | pico+ | lpc+ | nero | lcs | zws | pms | pico+TF | crm+ | hps+ | wms

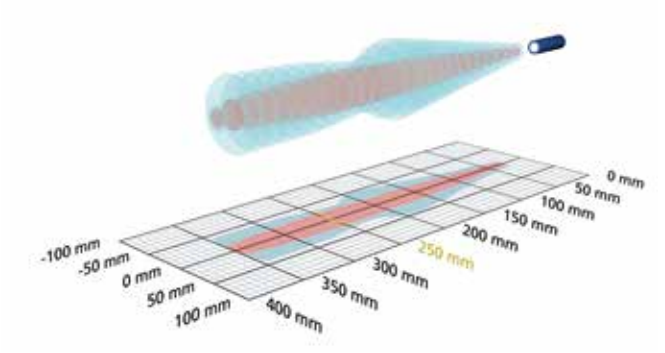

0.35 m

› 65 mm blind zone
› 350 mm operating range
› 600 mm maximum range
› f = 400 kHz, λ = 0.9 mm

Used in the following product groups:

mic+ | mic | pico+ | lpc+ | nero | lcs | pms | pico+TF | crm+ | hps+ | wms

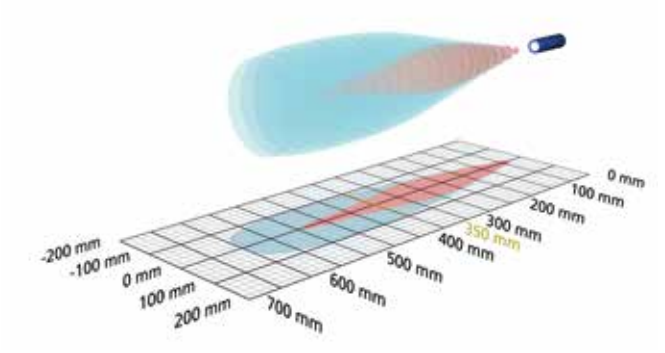

0.7 m

› 120 mm blind zone
› 700 mm operating range
› 1,000 mm maximum range
› f = 300 kHz, λ = 1.1 mm

Used in the following product group:

zws

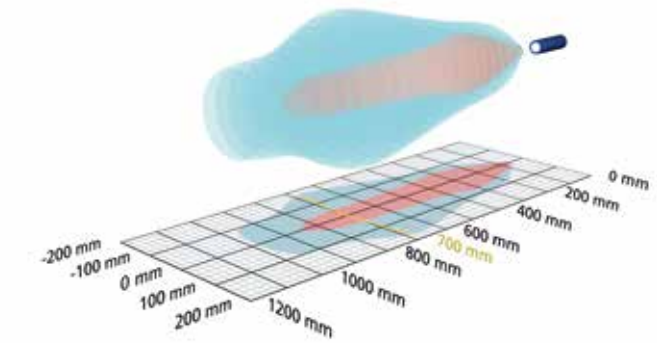

1.0 m

› 120 mm blind zone
› 1,000 mm operating range
› 1,300 mm maximum range
› f = 200 kHz, λ = 1.7 mm

Used in the following product groups:

pico+ | lpc+ | nero | pms | pico+TF

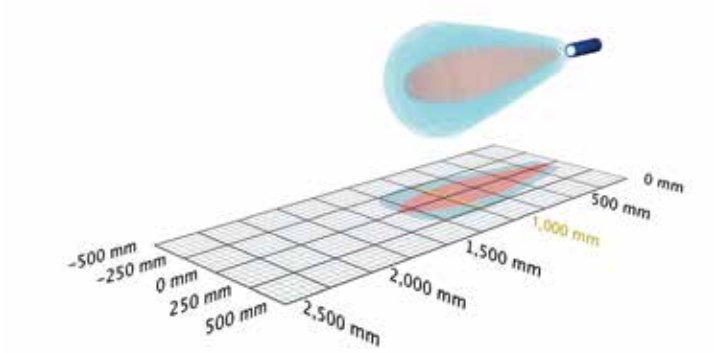

1.3 m

› 200 mm blind zone
› 1,300 mm operating range
› 2,000 mm maximum range
› f = 200 kHz, λ = 1.7 mm

Used in the following product groups:

mic+ | mic | lcs | crm+ | hps+ | wms

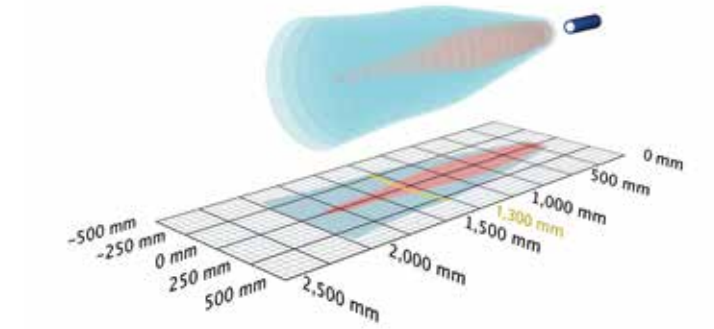

3.4 m

› 350 mm blind zone
› 3,400 mm operating range
› 5,000 mm maximum range
› f = 120 kHz, λ = 2.9 mm

Used in the following product groups:

mic+ | mic | lcs+ | crm+ | hps+ | wms

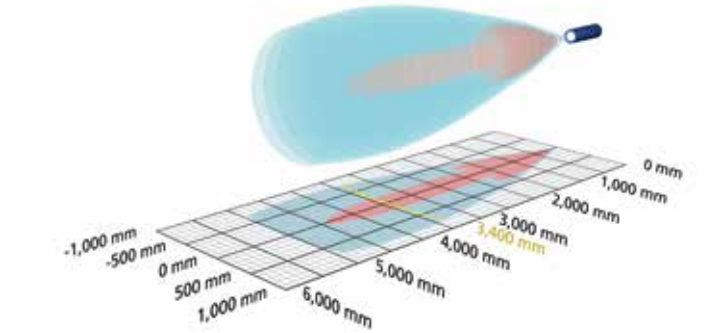

6.0 m

› 600 mm blind zone
› 6,000 mm operating range
› 8,000 mm maximum range
› f = 80 kHz, λ = 4.3 mm

Used in the following product groups:

mic+ | mic | lcs+ | crm+ | wms

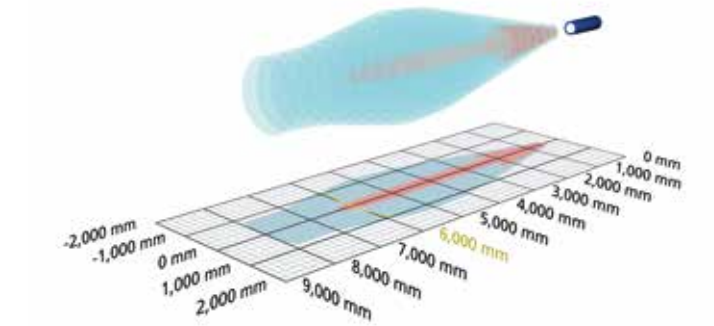

Round bar, 10 mm Ø or 27 mm Ø | Operating range | 500 x 500 mm plate | Status as at 2018

			0.07 m	0.15 m	0.24 m	0.25 m
Distance-measuring sensors	Configurable by menu using a digital display	mic+				
	Heavy-duty variant with metal plug	mic				
	90° angled head, M18 threaded sleeve	pico+				
	Two switching outputs, analogue output plus one switching output	lpc+				
	Proximity switch in M18 plastic sleeve	nero				
	The smallest M12 sensor in the world	nano				
	Cuboidal design with lateral sound exit	lcs+ lcs				
	Compatible with many optical sensors	zws				
	Miniature design	sks				
	Metal housing, compatible with many optical sensors	ucs				
	For use in the food and pharmaceutical industry	pms				
	Level sensor in M22 housing with protective film	pico+TF				
	Ultrasonic transducer with protective film	crm+				
	High chemical- and pressure-resistant up to 6 bar	hps+				
	For customer-supplied evaluation with µP	wms				
Sensors for special applications	Double-sheet controls	dbk+				
	Label and splice sensors	esp				
	Label and splice sensors	esf				
	Edge sensors	bks+ bks				
	Through-beam sensor in different housings	ews				
Specials	LinkControl adapter	LCA-2				

0.35 m	0.7 m	1.0 m	1.3 m	3.4 m	6.0 m	IO-Link	1 switching output	2 switching outputs	1 analogue output	1 analogue output and 1 switching output	3 switching outputs	1 trigger input and 1 echo output
						●	●	●	●	●		
							●		●			
						●	●		●			
						●		●		●		
							●					
							●		●			
						● *	●	●	●		●	
							●		●			
						●	●		●			
								●				
						●	●		●			
						●	●		●			
							●	●	●			
								●		●		
												●
								●				
								●				
						●	●	●				
						● *			●	●		
							●					

*available for lcs+ and bks+ models

mic+

mic+ sensors are available in four unit variants with five different detection ranges.

HIGHLIGHTS

- Digital display with direct measured value output in mm/cm or %
- IO-Link interface › for support of the new industry standard
- Numeric configuration of the sensor using digital display › permits complete advance configuration of the sensor
- Automatic synchronisation and multiplex operation › for simultaneous operation of up to ten sensors in close quarters
- UL Listed to Canadian and US safety standards

BASICS

- 1 Push-Pull switching output › pnp or npn basis
- 1 or 2 switching outputs › in pnp or npn variants
- Analogue output 4–20 mA and 0–10 V › with automatic switching between current and voltage outputs
- Analogue output plus 1 pnp switching output
- 5 detection ranges with a measurement range of 30 mm to 8 m
- microsonic Teach-in by using button T1 or T2
- 0.025 mm to 2.4 mm resolution
- Temperature compensation
- 9–30 V operating voltage
- LinkControl › for configuration of sensors from a PC

IO-Link integrated

Also see the chapter "Function and advantages"

TouchControl with LED display

Winding diameter measuring at the laminating machine

The mic+ sensor family

embedded in its M30 housing design covers a measuring range from 30 mm to 8 m with its five detection ranges. Depending on the detection range, the internal resolution for distance measurement is 0.025 mm to 2.4 mm. All sensors are equipped with integrated temperature compensation.

The sensors are listed to applicable UL Standards and requirements by UL for Canada and the US.

Four different output stages

are available for all five detection ranges:

- 1 switching output, optionally in pnp, npn or Push-Pull circuitry
- 2 switching outputs, optionally in pnp or npn circuitry
- 1 analogue output 4–20 mA and 0–10 V
- 1 analogue output with an additional pnp switching output

With TouchControl

all sensor settings are made. The easily readable LED display constantly shows the current distance value and automatically alternates between the millimetre and centimetre indication. By operating the two keys beneath the LED display, the parameterisation is called up and the self-explanatory menu structure is run through. The detection points of the switching outputs and the window limits for the analogue output can be preset numerically via the LED display without the object to be detected being positioned within the detection range. Therefore, it is possible to completely set the sensor without the help of auxiliary reflectors, even outside the actual application.

Two three-colour LEDs

always indicate the current status of the switching outputs and/or the analogue output.

Further additional functions (add-ons)

are available as an option within the TouchControl menu structure.

Measured distances can be smoothed with different measurement filters and dampened using a ten-level filter. A high measuring-value attenuation is useful for filling-level measuring operations with wave motions or in situations where parts may sporadically fly between the sensor and the actual measuring surface. The default filter is F01. Thus, the sensors are preset for rapid counting and control operations.

As further add-ons, the default settings of the switching hysteresis of the switching outputs can be changed if required. The LED display can be permanently switched off or dimmed.

Analogue sensors

verify the load connected to the output and automatically switch to 4–20 mA current output and 0–10 V voltage output depending on the resistance value. The load verification by the sensor is always initiated upon connection of the operating voltage.

In the add-on menu of TouchControl, the user can, however, also preset the sensor to current or voltage output. In this menu, the measuring value output on the LED display with analogue sensors can additionally be changed to indicate percentage. The window limits of the analogue characteristic curve then correspond to the 0 % or the 100 % value respectively.

Synchronisation

of up to ten sensors automatically also operates in a mixed configuration of sensors with different detection ranges. The measurement repetition rate is then determined by the sensor with the largest detection range. If the sensors are electrically connected via pin 5 of the M12 circular connector, the synchronisation is active.

In synchronised operation, all sensors initiate the measuring process at exactly the same time. With relatively narrow mounting distances between the sensors, a sensor may also receive echo signals from an adjacent sensor. This can be used as an advantage, e.g. to broaden a sensor's detection range.

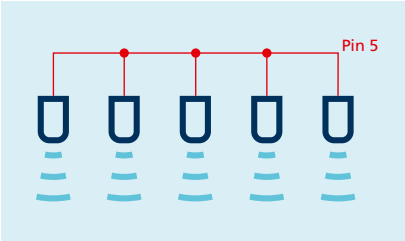

Synchronisation via pin 5

If more than ten sensors need to be synchronised, this can be carried out with the SyncBox1, which is available as an accessory.

Multiplex operation

ensures that each sensor can only receive echo signals from its own transmission pulse, which completely avoids any interference between the sensors (crosstalk).

Numerical setting via LED display

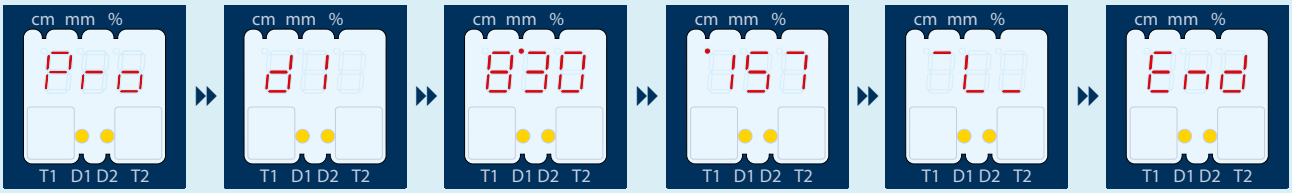

Press both keys until "Pro" for programming is shown on the LED display.

Select the output to be set (according to sensor type d1, d2 or IU).

Via the LED display, set the switching point (or, with analogue outputs, the sensor-close window limit) in mm/cm.

If window mode is required for the switching output, the rear window limit must be set (or, with analogue outputs, the sensor-distant window limit) in mm/cm.

Select between NCC and NOC (or, with analogue outputs, between rising and falling characteristic).

Ready.

For numerical input, the object to be detected does not need to be placed within the sensor's detection range.

Each sensor is assigned an address from 1 to 10 for this purpose in the add-on menu. The sensors then work in multiplex mode and carry out their measurements one after the other in ascending address order.

The setting of a switching or an analogue output

is either carried out by means of numerically entering the desired distance values (refer to graphic left below) or by means of a Teach-in procedure (refer to this page). Thanks to this, the user can select the preferred setting mode.

In the microsonic Teach-in process

the object to be detected must be placed in the desired distance 1 to the sensor. The button assigned to the output must then be pressed until tEACH d1 (or tEACH d2) appears on the LED display. Finally, the Teach-in procedure must be confirmed by a further short keystroke. Ready.

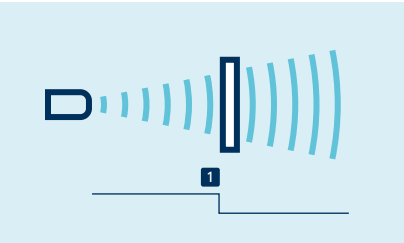

Teach-in of a switching point

To set an analogue output

the object to be detected must first be placed on the sensor-close window limit 1 and the key assigned to the output must be pressed until tEACH 1U appears on the display. Then, the object to be detected must be moved to the sensor-distant window limit 2 and the Teach-in procedure must be terminated by a further short keystroke. Ready.

To set of window mode

with two switching points, is the same as setting a switching point.

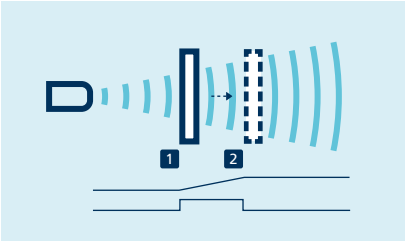

Teach-in of an analogue characteristic or a window with two switching points

NCC/NOC

for the switching outputs and rising/falling characteristic for the analogue sensors can also be set by means of the Teach-in procedure. For this, press the key assigned to output until the symbol ¯L_ or _-¯ appears on the display.

With each further keystroke, the NCC/NOC (_J¯/¯L_) and rising/falling (_-¯/¯-_) settings are alternated. After approx. 10 seconds, the new setting is automatically stored.

LinkControl

consists of the LinkControl adapter and the LinkControl software and facilitates the configuration of the mic+ sensors via a PC or laptop with all conventional Windows® operating systems. All settings of the TouchControl menu can be read out during operation, edited on the PC, buffered and re-entered into the sensor. Especially the two measuring value plotters for the visualisation of distance values support the development of solutions for complex automation tasks (also refer to the chapter "Accessories").

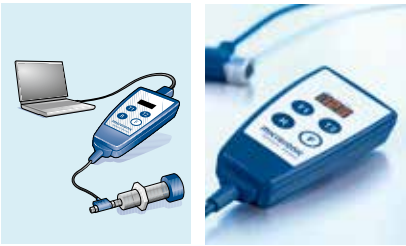

Sensor connected to the PC via LCA-2 for programming

IO-Link integrated

in version 1.1 for sensors with single switching output.

	mic+25	mic+35
	0.25 m	0.35 m
measuring range	**30 – 350 mm**	**65 – 600 mm**

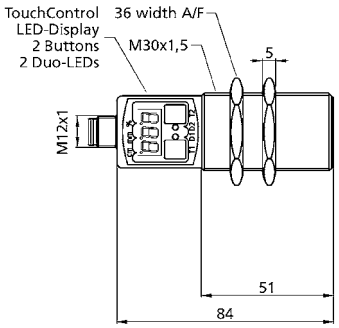

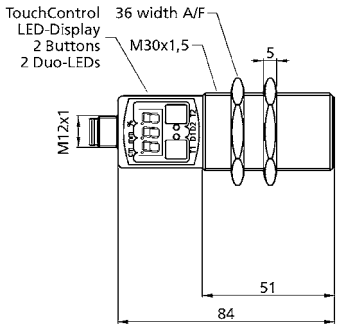

	mic+25	mic+35
blind zone	30 mm	65 mm
operating range	250 mm	350 mm
maximum range	350 mm	600 mm
angle of beam spread	please see ⓘ	please see ⓘ
transducer frequency	320 kHz	400 kHz
resolution/sampling rate	0.1 mm	0.1 mm
reproducibility	± 0.15 %	± 0.15 %
accuracy	± 1 % (temperature drift internally compensated)	± 1 % (temperature drift internally compensated)
operating voltage U_B	9 V to 30 V DC, reverse polarity protection	9 V to 30 V DC, reverse polarity protection
no-load current consumption	≤ 80 mA	≤ 80 mA
housing	brass sleeve, nickel-plated[1], plastic parts: PBT, TPU; ultrasonic transducer: polyurethane foam, epoxy resin with glass content	brass sleeve, nickel-plated[1], plastic parts: PBT, TPU; ultrasonic transducer: polyurethane foam, epoxy resin with glass content
class of protection according to EN 60529	IP 67	IP 67
type of connection	5-pin M12 initiator plug	5-pin M12 initiator plug
controls	TouchControl	TouchControl
scope for settings	• numeric configuration and Teach-in • LCA-2 with LinkControl • IO-Link	• numeric configuration and Teach-in • LCA-2 with LinkControl • IO-Link
IO-Link	V 1.1	V 1.1
IO-Link SIO mode support	yes	yes
IO-Link min. cycle time	8.4 ms	16 ms
Smart Sensor Profile	yes	yes
operating temperature	-25°C to +70°C	-25°C to +70°C
storage temperature	-40°C to +85°C	-40°C to +85°C
weight	150 g	150 g
switching hysteresis[1]	3 mm	5 mm
switching frequency[1]	25 Hz	12 Hz
response time[1]	32 ms	64 ms
delay prior to availability	< 300 ms	< 300 ms
order number[1),2)]	**mic+25/F/TC**	**mic+35/F/TC**
switching output	Push-Pull, U_B-3 V, -U_B+3 V, I_{max} = 100 mA	Push-Pull, U_B-3 V, -U_B+3 V, I_{max} = 100 mA

Enclosure Type 1
For use only in industrial machinery NFPA 79 applications.

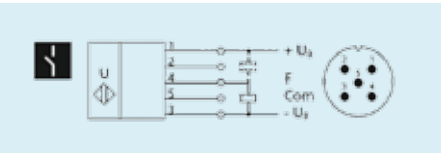

1 Push-Pull switching output

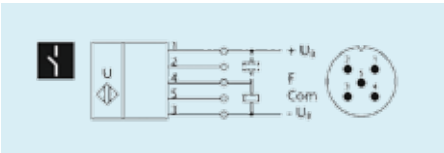

1 Push-Pull switching output

[1] Can be programmed with TouchControl, LinkControl and IO-Link.

mic+130	mic+340	mic+600
1.3 m	3.4 m	6.0 m
200 – 2,000 mm	**350 – 5,000 mm**	**600 – 8,000 mm**

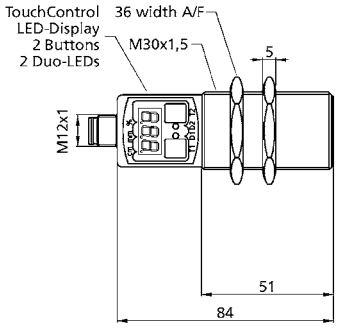

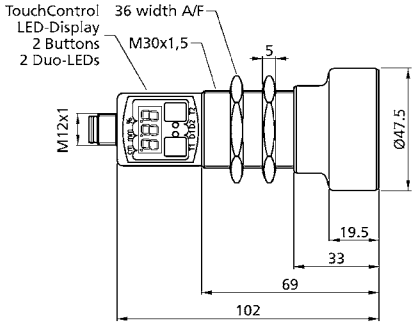

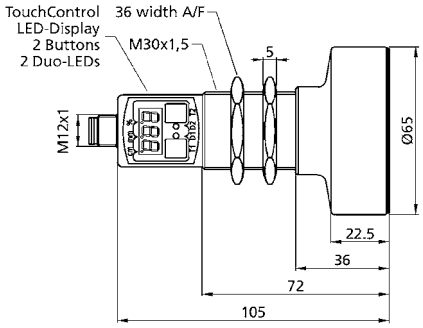

200 mm	350 mm	600 mm
1,300 mm	3,400 mm	6,000 mm
2,000 mm	5,000 mm	8,000 mm
please see ⓘ	please see ⓘ	please see ⓘ
200 kHz	120 kHz	80 kHz
1 mm	1 mm	1 mm
± 0.15 %	± 0.15 %	± 0.15 %
± 1 % (temperature drift internally compensated)	± 1 % (temperature drift internally compensated)	± 1 % (temperature drift internally compensated)
9 V to 30 V DC, reverse polarity protection	9 V to 30 V DC, reverse polarity protection	9 V to 30 V DC, reverse polarity protection
≤ 80 mA	≤ 80 mA	≤ 80 mA
brass sleeve, nickel-plated[1], plastic parts: PBT, TPU;	brass sleeve, nickel-plated[1], plastic parts: PBT, TPU;	brass sleeve, nickel-plated[1], plastic parts: PBT, TPU;
ultrasonic transducer: polyurethane foam,	ultrasonic transducer: polyurethane foam,	ultrasonic transducer: polyurethane foam,
epoxy resin with glass content	epoxy resin with glass content	epoxy resin with glass content
IP 67	IP 67	IP 67
5-pin M12 initiator plug	5-pin M12 initiator plug	5-pin M12 initiator plug
TouchControl	TouchControl	TouchControl
• numeric configuration and Teach-in	• numeric configuration and Teach-in	• numeric configuration and Teach-in
• LCA-2 with LinkControl	• LCA-2 with LinkControl	• LCA-2 with LinkControl
• IO-Link	• IO-Link	• IO-Link
V 1.1	V 1.1	V 1.1
yes	yes	yes
23.2 ms	43.2 ms	60.8 ms
yes	yes	yes
-25°C to +70°C	-25°C to +70°C	-25°C to +70°C
-40°C to +85°C	-40°C to +85°C	-40°C to +85°C
150 g	210 g	270 g
20 mm	50 mm	100 mm
8 Hz	4 Hz	3 Hz
92 ms	172 ms	240 ms
< 300 ms	< 380 ms	< 450 ms
mic+130/F/TC	**mic+340/F/TC**	**mic+600/F/TC**
Push-Pull, U_B-3 V, -U_B+3 V, I_{max} = 100 mA	Push-Pull, U_B-3 V, -U_B+3 V, I_{max} = 100 mA	Push-Pull, U_B-3 V, -U_B+3 V, I_{max} = 100 mA

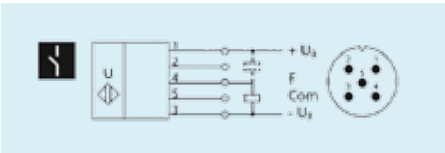

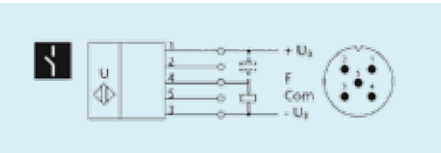

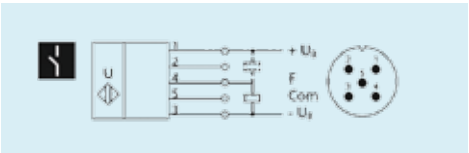

1 Push-Pull switching output	1 Push-Pull switching output	1 Push-Pull switching output

[2] Model with cable on request.

	mic+25	mic+35
	0.25 m	0.35 m
measuring range	**30 – 350 mm**	**65 – 600 mm**

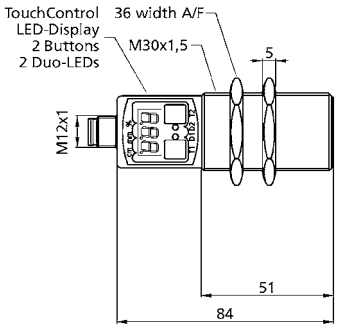

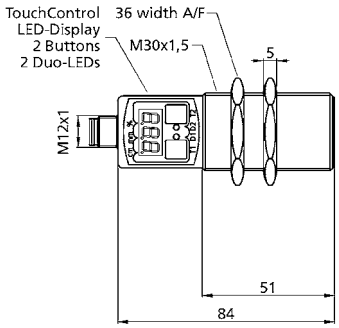

blind zone	30 mm	65 mm
operating range	250 mm	350 mm
maximum range	350 mm	600 mm
angle of beam spread	please see ⓘ	please see ⓘ
transducer frequency	320 kHz	400 kHz
resolution/sampling rate	0.025 mm	0.025 mm
reproducibility	± 0.15 %	± 0.15 %
accuracy	± 1 % (temperature drift internally compensated)	± 1 % (temperature drift internally compensated)
operating voltage U_B	9 V to 30 V DC, reverse polarity protection	9 V to 30 V DC, reverse polarity protection
no-load current consumption	≤ 80 mA	≤ 80 mA
housing	brass sleeve, nickel-plated[1], plastic parts: PBT, TPU; ultrasonic transducer: polyurethane foam, epoxy resin with glass content	brass sleeve, nickel-plated[1], plastic parts: PBT, TPU; ultrasonic transducer: polyurethane foam, epoxy resin with glass content
class of protection according to EN 60529	IP 67	IP 67
type of connection	5-pin M12 initiator plug[2]	5-pin M12 initiator plug[2]
controls	TouchControl	TouchControl
scope for settings	• numeric configuration and Teach-in • LCA-2 with LinkControl	• numeric configuration and Teach-in • LCA-2 with LinkControl
indicators	3-digit LED display, 2 three-colour LEDs	3-digit LED display, 2 three-colour LEDs
operating temperature	-25°C to +70°C	-25°C to +70°C
storage temperature	-40°C to +85°C	-40°C to +85°C
weight	150 g	150 g
switching hysteresis[3]	3 mm	5 mm
switching frequency[3]	25 Hz	12 Hz
response time[3]	32 ms	64 ms
delay prior to availability	< 300 ms	< 300 ms
order number[1),2)]	**mic+25/D/TC**	**mic+35/D/TC**
switching output	pnp, U_B-2 V, I_{max} = 200 mA NOC/NCC adjustable, short-circuit-proof	pnp, U_B-2 V, I_{max} = 200 mA NOC/NCC adjustable, short-circuit-proof

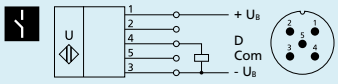

1 pnp switching output

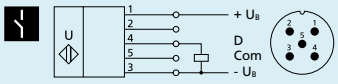

1 pnp switching output

order number[1)]	**mic+25/E/TC**	**mic+35/E/TC**
switching output	npn, -U_B+2 V, I_{max} = 200 mA NOC/NCC adjustable, short-circuit-proof	npn, -U_B+2 V, I_{max} = 200 mA NOC/NCC adjustable, short-circuit-proof

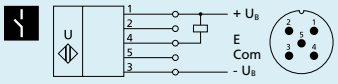

1 npn switching output

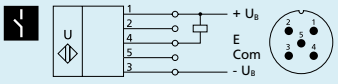

1 npn switching output

Enclosure Type 1
For use only in industrial machinery NFPA 79 applications.

[1] To order the stainless-steel version, please add the suffix **/E** to the order number.

mic+130

1.3 m

200 – 2,000 mm

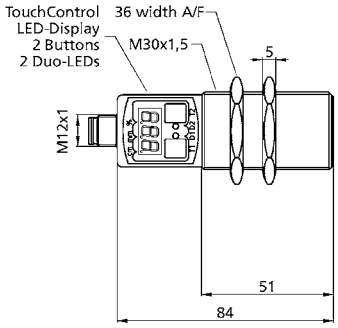

mic+340

3.4 m

350 – 5,000 mm

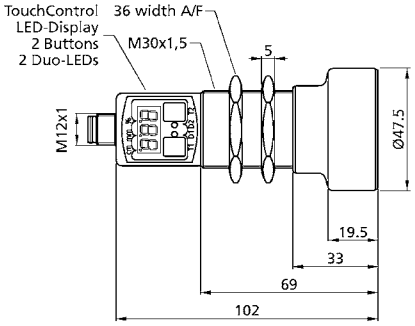

mic+600

6.0 m

600 – 8,000 mm

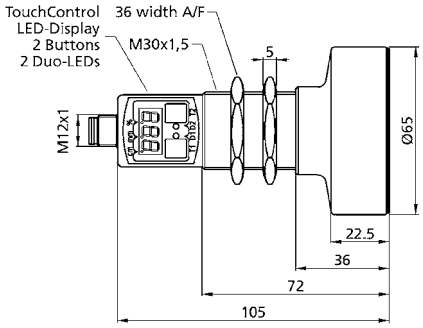

200 mm	350 mm	600 mm
1,300 mm	3,400 mm	6,000 mm
2,000 mm	5,000 mm	8,000 mm
please see ⓘ	please see ⓘ	please see ⓘ
200 kHz	120 kHz	80 kHz
0.18 mm	0.18 mm	0.18 mm
± 0.15 %	± 0.15 %	± 0.15 %
± 1 % (temperature drift internally compensated)	± 1 % (temperature drift internally compensated)	± 1 % (temperature drift internally compensated)
9 V to 30 V DC, reverse polarity protection	9 V to 30 V DC, reverse polarity protection	9 V to 30 V DC, reverse polarity protection
≤ 80 mA	≤ 80 mA	≤ 80 mA
brass sleeve, nickel-plated[1], plastic parts: PBT, TPU;	brass sleeve, nickel-plated[1], plastic parts: PBT, TPU;	brass sleeve, nickel-plated[1], plastic parts: PBT, TPU;
ultrasonic transducer: polyurethane foam,	ultrasonic transducer: polyurethane foam,	ultrasonic transducer: polyurethane foam,
epoxy resin with glass content	epoxy resin with glass content	epoxy resin with glass content
IP 67	IP 67	IP 67
5-pin M12 initiator plug[2]	5-pin M12 initiator plug[2]	5-pin M12 initiator plug[2]
TouchControl	TouchControl	TouchControl
• numeric configuration and Teach-in	• numeric configuration and Teach-in	• numeric configuration and Teach-in
• LCA-2 with LinkControl	• LCA-2 with LinkControl	• LCA-2 with LinkControl
3-digit LED display, 2 three-colour LEDs	3-digit LED display, 2 three-colour LEDs	3-digit LED display, 2 three-colour LEDs
-25°C to +70°C	-25°C to +70°C	-25°C to +70°C
-40°C to +85°C	-40°C to +85°C	-40°C to +85°C
150 g	210 g	270 g
20 mm	50 mm	100 mm
8 Hz	4 Hz	3 Hz
92 ms	172 ms	240 ms
< 300 ms	< 380 ms	< 450 ms
mic+130/D/TC	**mic+340/D/TC**	**mic+600/D/TC**
pnp, U_B-2 V, I_{max} = 200 mA	pnp, U_B-2 V, I_{max} = 200 mA	pnp, U_B-2 V, I_{max} = 200 mA
NOC/NCC adjustable, short-circuit-proof	NOC/NCC adjustable, short-circuit-proof	NOC/NCC adjustable, short-circuit-proof

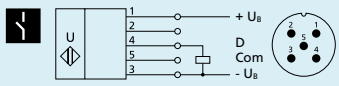

1 pnp switching output

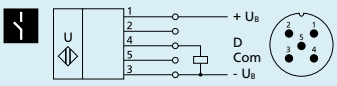

1 pnp switching output

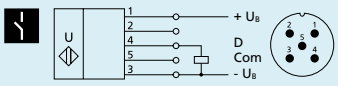

1 pnp switching output

mic+130/E/TC	**mic+340/E/TC**	**mic+600/E/TC**
npn, -U_B+2 V, I_{max} = 200 mA	npn, -U_B+2 V, I_{max} = 200 mA	npn, -U_B+2 V, I_{max} = 200 mA
NOC/NCC adjustable, short-circuit-proof	NOC/NCC adjustable, short-circuit-proof	NOC/NCC adjustable, short-circuit-proof

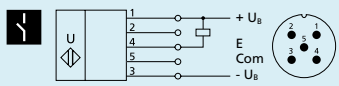

1 npn switching output

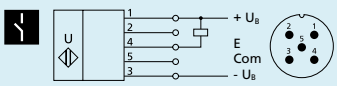

1 npn switching output

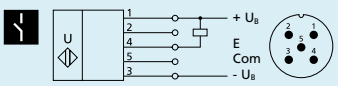

1 npn switching output

[2] Model with cable on request.

[3] Can be programmed with TouchControl and LinkControl.

	mic+25	mic+35
	0.25 m	0.35 m
measuring range	**30 – 350 mm**	**65 – 600 mm**

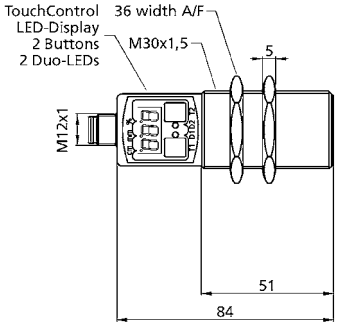

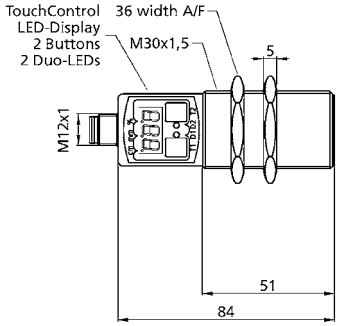

blind zone	30 mm	65 mm
operating range	250 mm	350 mm
maximum range	350 mm	600 mm
angle of beam spread	please see ⓘ	please see ⓘ
transducer frequency	320 kHz	400 kHz
resolution/sampling rate	0.025 mm	0.025 mm
reproducibility	± 0.15 %	± 0.15 %
accuracy	± 1 % (temperature drift internally compensated)	± 1 % (temperature drift internally compensated)
operating voltage U_B	9 V to 30 V DC, reverse polarity protection	9 V to 30 V DC, reverse polarity protection
no-load current consumption	≤ 80 mA	≤ 80 mA
housing	brass sleeve, nickel-plated[1], plastic parts: PBT, TPU; ultrasonic transducer: polyurethane foam, epoxy resin with glass content	brass sleeve, nickel-plated[1], plastic parts: PBT, TPU; ultrasonic transducer: polyurethane foam, epoxy resin with glass content
class of protection according to EN 60529	IP 67	IP 67
type of connection	5-pin M12 initiator plug[2]	5-pin M12 initiator plug[2]
controls	TouchControl	TouchControl
scope for settings	• numeric configuration and Teach-in • LCA-2 with LinkControl	• numeric configuration and Teach-in • LCA-2 with LinkControl
indicators	3-digit LED display, 2 three-colour LEDs	3-digit LED display, 2 three-colour LEDs
operating temperature	-25°C to +70°C	-25°C to +70°C
storage temperature	-40°C to +85°C	-40°C to +85°C
weight	150 g	150 g
switching hysteresis[3]	3 mm	5 mm
switching frequency[3]	25 Hz	12 Hz
response time[3]	32 ms	64 ms
delay prior to availability	< 300 ms	< 300 ms
order number[1),2)]	**mic+25/DD/TC**	**mic+35/DD/TC**
switching outputs	2 x pnp, U_B-2 V, I_{max} = 2 x 200 mA NOC/NCC adjustable, short-circuit-proof	2 x pnp, U_B-2 V, I_{max} = 2 x 200 mA NOC/NCC adjustable, short-circuit-proof

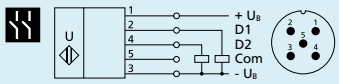

2 pnp switching outputs

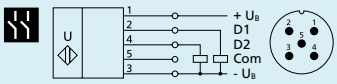

2 pnp switching outputs

order number[1),2)]	**mic+25/EE/TC**	**mic+35/EE/TC**
switching outputs	2 x npn, -U_B+2 V, I_{max} = 2 x 200 mA NOC/NCC adjustable, short-circuit-proof	2 x npn, -U_B+2 V, I_{max} = 2 x 200 mA NOC/NCC adjustable, short-circuit-proof

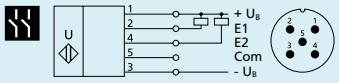

2 npn switching outputs

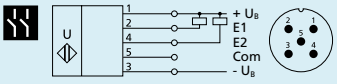

2 npn switching outputs

Enclosure Type 1
For use only in industrial machinery NFPA 79 applications.

[1] To order the stainless-steel version, please add the suffix **/E** to the order number.

mic+130	mic+340	mic+600
1.3 m	3.4 m	6.0 m
200 – 2,000 mm	**350 – 5,000 mm**	**600 – 8,000 mm**

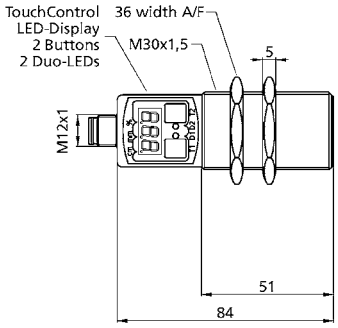

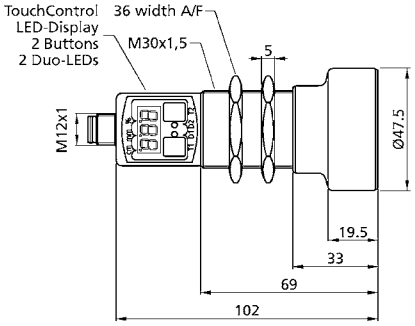

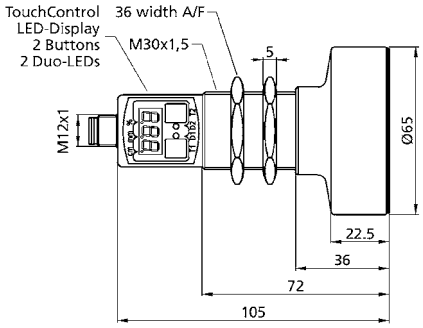

200 mm	350 mm	600 mm
1,300 mm	3,400 mm	6,000 mm
2,000 mm	5,000 mm	8,000 mm
please see ⓘ	please see ⓘ	please see ⓘ
200 kHz	120 kHz	80 kHz
0.18 mm	0.18 mm	0.18 mm
± 0.15 %	± 0.15 %	± 0.15 %
± 1 % (temperature drift internally compensated)	± 1 % (temperature drift internally compensated)	± 1 % (temperature drift internally compensated)
9 V to 30 V DC, reverse polarity protection	9 V to 30 V DC, reverse polarity protection	9 V to 30 V DC, reverse polarity protection
≤ 80 mA	≤ 80 mA	≤ 80 mA
brass sleeve, nickel-plated[1], plastic parts: PBT, TPU;	brass sleeve, nickel-plated[1], plastic parts: PBT, TPU;	brass sleeve, nickel-plated[1], plastic parts: PBT, TPU;
ultrasonic transducer: polyurethane foam,	ultrasonic transducer: polyurethane foam,	ultrasonic transducer: polyurethane foam,
epoxy resin with glass content	epoxy resin with glass content	epoxy resin with glass content
IP 67	IP 67	IP 67
5-pin M12 initiator plug[2]	5-pin M12 initiator plug[2]	5-pin M12 initiator plug[2]
TouchControl	TouchControl	TouchControl
• numeric configuration and Teach-in	• numeric configuration and Teach-in	• numeric configuration and Teach-in
• LCA-2 with LinkControl	• LCA-2 with LinkControl	• LCA-2 with LinkControl
3-digit LED display, 2 three-colour LEDs	3-digit LED display, 2 three-colour LEDs	3-digit LED display, 2 three-colour LEDs
-25°C to +70°C	-25°C to +70°C	-25°C to +70°C
-40°C to +85°C	-40°C to +85°C	-40°C to +85°C
150 g	210 g	270 g
20 mm	50 mm	100 mm
8 Hz	4 Hz	3 Hz
92 ms	172 ms	240 ms
< 300 ms	< 380 ms	< 450 ms
mic+130/DD/TC	**mic+340/DD/TC**	**mic+600/DD/TC**
2 x pnp, U_B-2 V, I_{max} = 2 x 200 mA	2 x pnp, U_B-2 V, I_{max} = 2 x 200 mA	2 x pnp, U_B-2 V, I_{max} = 2 x 200 mA
NOC/NCC adjustable, short-circuit-proof	NOC/NCC adjustable, short-circuit-proof	NOC/NCC adjustable, short-circuit-proof

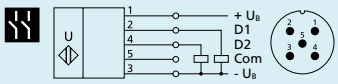

2 pnp switching outputs

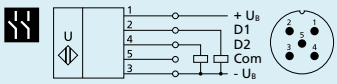

2 pnp switching outputs

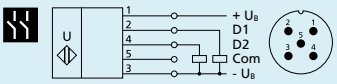

2 pnp switching outputs

mic+130/EE/TC	**mic+340/EE/TC**	**mic+600/EE/TC**
2 x npn, -U_B+2 V, I_{max} = 2 x 200 mA	2 x npn, -U_B+2 V, I_{max} = 2 x 200 mA	2 x npn, -U_B+2 V, I_{max} = 2 x 200 mA
NOC/NCC adjustable, short-circuit-proof	NOC/NCC adjustable, short-circuit-proof	NOC/NCC adjustable, short-circuit-proof

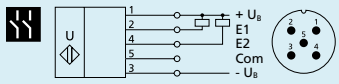

2 npn switching outputs

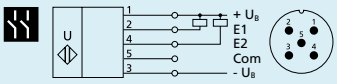

2 npn switching outputs

2 npn switching outputs

[2] Model with cable on request.

[3] Can be programmed with TouchControl and LinkControl.

	mic+25	mic+35
	0.25 m	0.35 m
measuring range	**30 – 350 mm**	**65 – 600 mm**

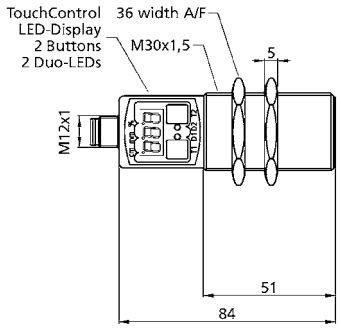

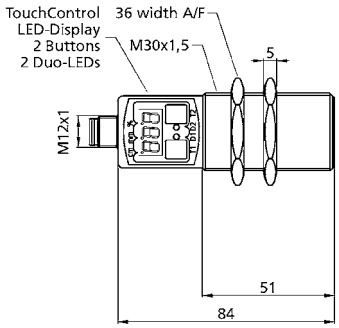

blind zone	30 mm	65 mm
operating range	250 mm	350 mm
maximum range	350 mm	600 mm
angle of beam spread	please see ⓘ	please see ⓘ
transducer frequency	320 kHz	400 kHz
resolution/sampling rate	0.025 mm to 0.10 mm, depending on the analogue window	0.025 mm to 0.17 mm, depending on the analogue window
reproducibility	± 0.15 %	± 0.15 %
accuracy	± 1 % (temperature drift internally compensated)	± 1 % (temperature drift internally compensated)
operating voltage U_B	9 V to 30 V DC, reverse polarity protection	9 V to 30 V DC, reverse polarity protection
no-load current consumption	≤ 80 mA	≤ 80 mA
housing	brass sleeve, nickel-plated[1], plastic parts: PBT, TPU; ultrasonic transducer: polyurethane foam, epoxy resin with glass content	brass sleeve, nickel-plated[1], plastic parts: PBT, TPU; ultrasonic transducer: polyurethane foam, epoxy resin with glass content
class of protection according to EN 60529	IP 67	IP 67
type of connection	5-pin M12 initiator plug[2]	5-pin M12 initiator plug[2]
controls	TouchControl	TouchControl
scope for settings	• numeric configuration and Teach-in • LCA-2 with LinkControl	• numeric configuration and Teach-in • LCA-2 with LinkControl
indicators	3-digit LED display, 2 three-colour LEDs	3-digit LED display, 2 three-colour LEDs
operating temperature	-25°C to +70°C	-25°C to +70°C
storage temperature	-40°C to +85°C	-40°C to +85°C
weight	150 g	150 g
response time[3]	32 ms	64 ms
delay prior to availability	< 300 ms	< 300 ms
order number[1),2)]	**mic+25/IU/TC**	**mic+35/IU/TC**
analogue output	current output 4 – 20 mA voltage output 0 – 10 V (at $U_B \geq 15$ V), short-circuit-proof switchable rising/falling	current output 4 – 20 mA voltage output 0 – 10 V (at $U_B \geq 15$ V), short-circuit-proof switchable rising/falling

Enclosure Type 1
For use only in industrial machinery NFPA 79 applications.

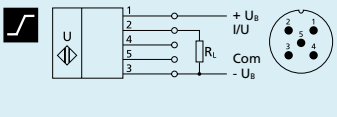

analogue output

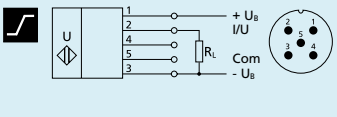

analogue output

[1] To order the stainless-steel version, please add the suffix **/E** to the order number.

mic+130

1.3 m

200 – 2,000 mm

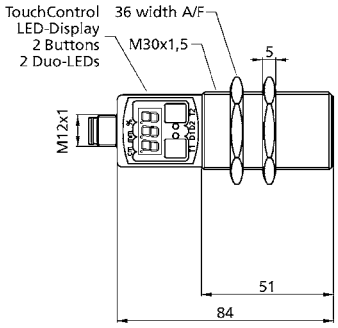

mic+340

3.4 m

350 – 5,000 mm

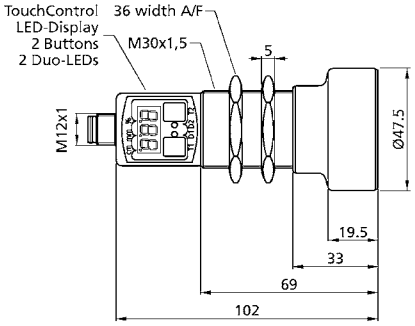

mic+600

6.0 m

600 – 8,000 mm

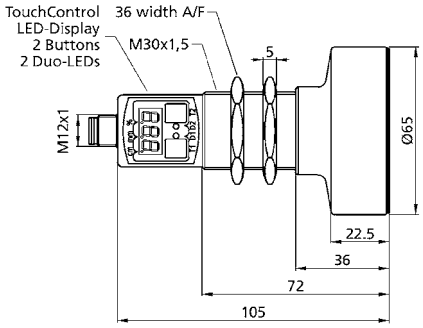

200 mm	350 mm	600 mm
1,300 mm	3,400 mm	6,000 mm
2,000 mm	5,000 mm	8,000 mm
please see ⓘ	please see ⓘ	please see ⓘ
200 kHz	120 kHz	80 kHz
0.18 mm to 0.57 mm, depending on the analogue window	0.18 mm to 1.5 mm, depending on the analogue window	0.18 mm to 2.4 mm, depending on the analogue window
± 0.15 %	± 0.15 %	± 0.15 %
± 1 % (temperature drift internally compensated)	± 1 % (temperature drift internally compensated)	± 1 % (temperature drift internally compensated)
9 V to 30 V DC, reverse polarity protection	9 V to 30 V DC, reverse polarity protection	9 V to 30 V DC, reverse polarity protection
≤ 80 mA	≤ 80 mA	≤ 80 mA
brass sleeve, nickel-plated[1], plastic parts: PBT, TPU; ultrasonic transducer: polyurethane foam, epoxy resin with glass content	brass sleeve, nickel-plated[1], plastic parts: PBT, TPU; ultrasonic transducer: polyurethane foam, epoxy resin with glass content	brass sleeve, nickel-plated[1], plastic parts: PBT, TPU; ultrasonic transducer: polyurethane foam, epoxy resin with glass content
IP 67	IP 67	IP 67
5-pin M12 initiator plug[2]	5-pin M12 initiator plug[2]	5-pin M12 initiator plug[2]
TouchControl • numeric configuration and Teach-in • LCA-2 with LinkControl	TouchControl • numeric configuration and Teach-in • LCA-2 with LinkControl	TouchControl • numeric configuration and Teach-in • LCA-2 with LinkControl
3-digit LED display, 2 three-colour LEDs	3-digit LED display, 2 three-colour LEDs	3-digit LED display, 2 three-colour LEDs
-25°C to +70°C	-25°C to +70°C	-25°C to +70°C
-40°C to +85°C	-40°C to +85°C	-40°C to +85°C
150 g	210 g	270 g
92 ms	172 ms	240 ms
< 300 ms	< 450 ms	< 450 ms
mic+130/IU/TC	**mic+340/IU/TC**	**mic+600/IU/TC**
current output 4 – 20 mA	current output 4 – 20 mA	current output 4 – 20 mA
voltage output 0 – 10 V (at $U_B \geq 15$ V), short-circuit-proof	voltage output 0 – 10 V (at $U_B \geq 15$ V), short-circuit-proof	voltage output 0 – 10 V (at $U_B \geq 15$ V), short-circuit-proof
switchable rising/falling	switchable rising/falling	switchable rising/falling

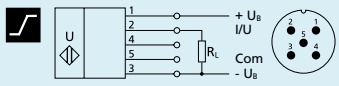

analogue output

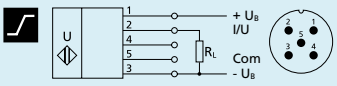

analogue output

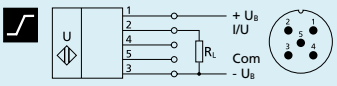

analogue output

[2] Model with cable on request.

[3] Can be programmed with TouchControl and LinkControl.

	mic+25	mic+35
	0.25 m	0.35 m
measuring range	**30–350 mm**	**65–600 mm**

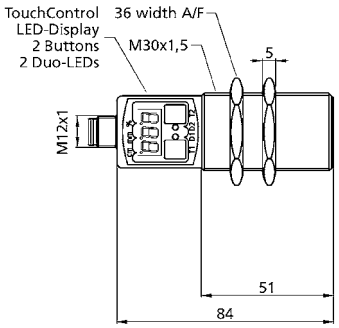

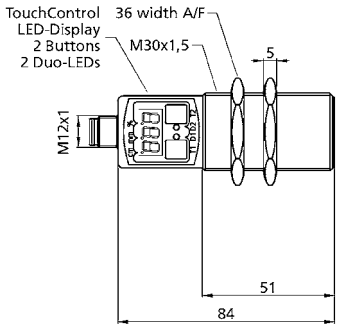

blind zone	30 mm	65 mm
operating range	250 mm	350 mm
maximum range	350 mm	600 mm
angle of beam spread	please see ⓘ	please see ⓘ
transducer frequency	320 kHz	400 kHz
resolution/sampling rate	0.025 mm to 0.10 mm, depending on the analogue window	0.025 mm to 0.17 mm, depending on the analogue window
reproducibility	± 0.15 %	± 0.15 %
accuracy	± 1 % (temperature drift internally compensated)	± 1 % (temperature drift internally compensated)
operating voltage U_B	9 V to 30 V DC, reverse polarity protection	9 V to 30 V DC, reverse polarity protection
no-load current consumption	≤ 80 mA	≤ 80 mA
housing	brass sleeve, nickel-plated[1], plastic parts: PBT, TPU; ultrasonic transducer: polyurethane foam, epoxy resin with glass content	brass sleeve, nickel-plated[1], plastic parts: PBT, TPU; ultrasonic transducer: polyurethane foam, epoxy resin with glass content
class of protection according to EN 60529	IP 67	IP 67
type of connection	5-pin M12 initiator plug[2]	5-pin M12 initiator plug[2]
controls	TouchControl	TouchControl
scope for settings	• numeric configuration and Teach-in • LCA-2 with LinkControl	• numeric configuration and Teach-in • LCA-2 with LinkControl
indicators	3-digit LED display, 2 three-colour LEDs	3-digit LED display, 2 three-colour LEDs
operating temperature	-25°C to +70°C	-25°C to +70°C
storage temperature	-40°C to +85°C	-40°C to +85°C
weight	150 g	150 g
switching hysteresis[3]	3 mm	5 mm
switching frequency[3]	25 Hz	12 Hz
response time[3]	32 ms	64 ms
delay prior to availability	< 300 ms	< 300 ms
order number[1),2)]	**mic+25/DIU/TC**	**mic+35/DIU/TC**
switching output	pnp, U_B-2 V, I_{max} = 200 mA NOC/NCC adjustable, short-circuit-proof	pnp, U_B-2 V, I_{max} = 200 mA NOC/NCC adjustable, short-circuit-proof
analogue output	current output 4–20 mA voltage output 0–10 V (at $U_B \geq 15$ V), short-circuit-proof switchable rising/falling	current output 4–20 mA voltage output 0–10 V (at $U_B \geq 15$ V), short-circuit-proof switchable rising/falling

Enclosure Type 1
For use only in industrial machinery NFPA 79 applications.

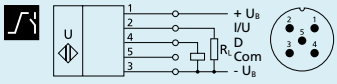

1 pnp switching output + analogue output

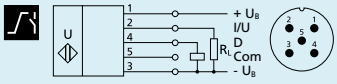

1 pnp switching output + analogue output

[1] To order the stainless-steel version, please add the suffix **/E** to the order number.

mic+130

1.3 m

200 – 2,000 mm

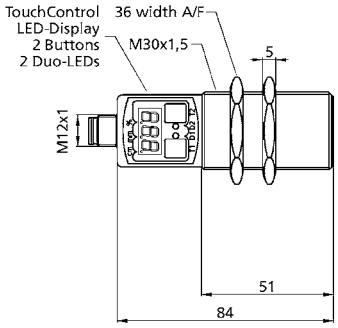

mic+340

3.4 m

350 – 5,000 mm

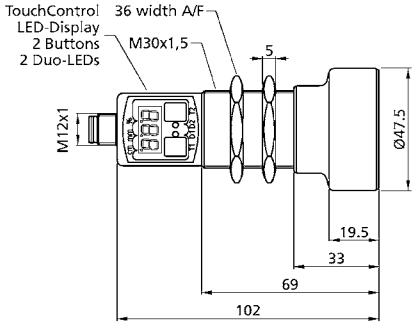

mic+600

6.0 m

600 – 8,000 mm

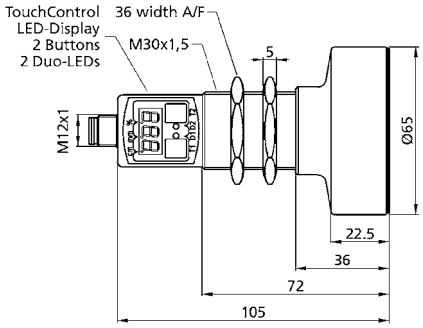

200 mm	350 mm	600 mm
1,300 mm	3,400 mm	6,000 mm
2,000 mm	5,000 mm	8,000 mm
please see ⓘ	please see ⓘ	please see ⓘ
200 kHz	120 kHz	80 kHz
0.18 mm to 0.57 mm, depending on the analogue window	0.18 mm to 1.5 mm, depending on the analogue window	0.18 mm to 2.4 mm, depending on the analogue window
± 0.15 %	± 0.15 %	± 0.15 %
± 1 % (temperature drift internally compensated)	± 1 % (temperature drift internally compensated)	± 1 % (temperature drift internally compensated)
9 V to 30 V DC, reverse polarity protection	9 V to 30 V DC, reverse polarity protection	9 V to 30 V DC, reverse polarity protection
≤ 80 mA	≤ 80 mA	≤ 80 mA
brass sleeve, nickel-plated[1], plastic parts: PBT, TPU; ultrasonic transducer: polyurethane foam, epoxy resin with glass content	brass sleeve, nickel-plated[1], plastic parts: PBT, TPU; ultrasonic transducer: polyurethane foam, epoxy resin with glass content	brass sleeve, nickel-plated[1], plastic parts: PBT, TPU; ultrasonic transducer: polyurethane foam, epoxy resin with glass content
IP 67	IP 67	IP 67
5-pin M12 initiator plug[2]	5-pin M12 initiator plug[2]	5-pin M12 initiator plug[2]
TouchControl	TouchControl	TouchControl
• numeric configuration and Teach-in	• numeric configuration and Teach-in	• numeric configuration and Teach-in
• LCA-2 with LinkControl	• LCA-2 with LinkControl	• LCA-2 with LinkControl
3-digit LED display, 2 three-colour LEDs	3-digit LED display, 2 three-colour LEDs	3-digit LED display, 2 three-colour LEDs
-25°C to +70°C	-25°C to +70°C	-25°C to +70°C
-40°C to +85°C	-40°C to +85°C	-40°C to +85°C
150 g	210 g	270 g
20 mm	50 mm	100 mm
8 Hz	4 Hz	3 Hz
92 ms	172 ms	240 ms
< 300 ms	< 450 ms	< 450 ms
mic+130/DIU/TC	**mic+340/DIU/TC**	**mic+600/DIU/TC**
pnp, U_B-2 V, I_{max} = 200 mA	pnp, U_B-2 V, I_{max} = 200 mA	pnp, U_B-2 V, I_{max} = 200 mA
NOC/NCC adjustable, short-circuit-proof	NOC/NCC adjustable, short-circuit-proof	NOC/NCC adjustable, short-circuit-proof
current output 4 – 20 mA	current output 4 – 20 mA	current output 4 – 20 mA
voltage output 0 – 10 V (at $U_B \geq 15$ V), short-circuit-proof	voltage output 0 – 10 V (at $U_B \geq 15$ V), short-circuit-proof	voltage output 0 – 10 V (at $U_B \geq 15$ V), short-circuit-proof
switchable rising/falling	switchable rising/falling	switchable rising/falling

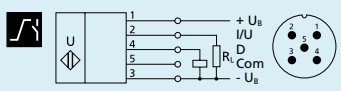

1 pnp switching output + analogue output

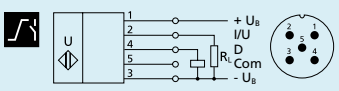

1 pnp switching output + analogue output

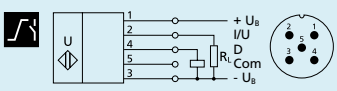

1 pnp switching output + analogue output

[2] Model with cable on request.

[3] Can be programmed with TouchControl and LinkControl.

mic

These completely metal mic sensors are available in two device designs with five different detection ranges.

HIGHLIGHTS

- M30 housing and M12 circular connector in metal design › for harsh usage conditions
- Automatic synchronisation › for simultaneous operation of up to ten sensors in close quarters

BASICS

- 1 switching output in pnp variant
- Analogue output 4–20 mA and 0–10 V › with automatic switching between current and voltage outputs
- 5 detection ranges with a measurement range of 30 mm to 8 m
- microsonic Teach-in on pin 5
- 0.18 mm to 2.4 mm resolution
- Temperature compensation
- 9–30 V operating voltage
- LinkControl › for configuration of sensors from a PC

M12 metal circular connector

Operation under rough conditions

This very solid construction

is fully made of metal from the M30 housing to the M12 circular connector. Since the sensors do not contain any operating elements or signal lamps, they are especially suited for application under extreme ambient conditions with high mechanical loads for housing and plug connector. The sensors are available in five detection ranges and cover a measuring range of 30 mm up to 8 m.

Two output stages

are available for all five detection ranges:

- 1 pnp switching output
- 1 analogue output 4–20 mA and 0–10 V

Sensors with switching output have three operating modes:

- Single switching point
- Two-way reflective barrier
- Window mode

Teach-in of a single switching point

- Place object to be detected at the desired distance 1.
- Apply $+U_B$ to pin 5 for about 3 seconds.
- Then apply $+U_B$ to pin 5 again for about 1 second.

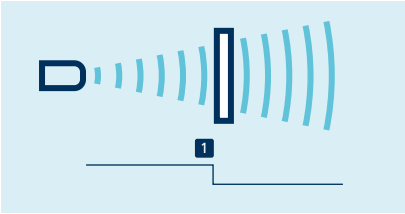

Teach-in of a switching point

Teach-in of a two-way reflective barrier

with a fixed reflector

- Apply $+U_B$ to pin 5 for about 3 seconds.
- Then apply $+U_B$ to pin 5 again for about 10 seconds.

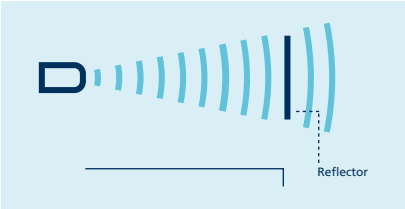

Teach-in of a two-way reflective barrier

For configuration of a window

- Place object at the near edge of the window 1.
- Apply $+U_B$ to pin 5 for about 3 seconds.
- Then move the object to the far edge of the window 2.
- Then apply $+U_B$ to pin 5 again for about 1 second.

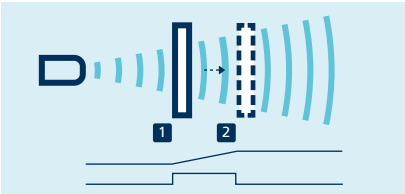

Teach-in of an analogue characteristic or a window with two switching points

NCC/NOC

and rising/falling analogue characteristic curve can also be set via pin 5.

LinkControl

optionally permits the extensive parameterisation of mic sensors. The LCA-2 LinkControl adapter, which is available as an accessory, can be used to connect mic sensors to the PC.

Sensor connected to the PC via LCA-2 for programming

Synchronisation

permits the simultaneous use of multiple mic sensors in one application. To avoid mutual interference, the sensors can be synchronised with one another. To do this, all the sensors are electrically connected on pin 5.

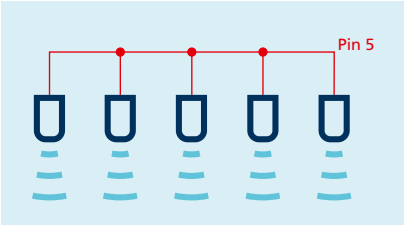

Synchronisation using pin 5

If more than ten sensors need to be synchronised, this can be carried out with the SyncBox1, which is available as an accessory.

	mic-25	mic-35
	0.25 m	0.35 m
measuring range	**30 – 350 mm**	**65 – 600 mm**

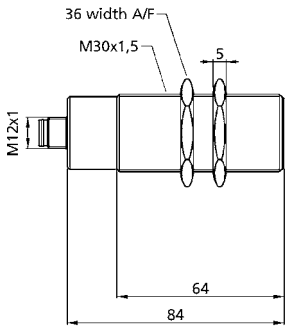

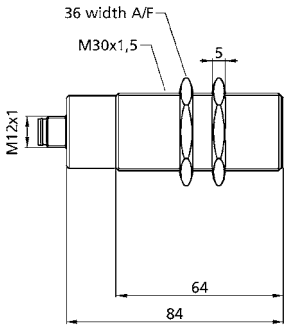

blind zone	30 mm	65 mm
operating range	250 mm	350 mm
maximum range	350 mm	600 mm
angle of beam spread	please see ⓘ	please see ⓘ
transducer frequency	320 kHz	400 kHz
resolution/sampling rate	0.18 mm	0.18 mm
reproducibility	± 0.15 %	± 0.15 %
accuracy	± 1 % (temperature drift internally compensated)	± 1 % (temperature drift internally compensated)
operating voltage U_B	9 V to 30 V DC, reverse polarity protection	9 V to 30 V DC, reverse polarity protection
no-load current consumption	≤ 55 mA	≤ 55 mA
housing	brass sleeve, nickel-plated	brass sleeve, nickel-plated
	plastic parts: PBT	plastic parts: PBT
	ultrasonic transducer: polyurethane foam,	ultrasonic transducer: polyurethane foam,
	epoxy resin with glass content	epoxy resin with glass content
class of protection according to EN 60529	IP 67	IP 67
type of connection	5-pin M12 initiator plug[2)]	5-pin M12 initiator plug[2)]
controls	com input (pin 5)	com input (pin 5)
scope for settings	• Teach-in via com input on pin 5	• Teach-in via com input on pin 5
	• LCA-2 with LinkControl	• LCA-2 with LinkControl
operating temperature	-25°C to +70°C	-25°C to +70°C
storage temperature	-40°C to +85°C	-40°C to +85°C
weight	200 g	200 g
switching hysteresis[3)]	3 mm	5 mm
switching frequency[3)]	25 Hz	12 Hz
response time[3)]	32 ms	64 ms
delay prior to availability	< 390 ms	< 420 ms
order number[2)]	**mic-25/D/M**	**mic-35/D/M**
switching output	pnp, U_B-2 V, I_{max} = 200 mA	pnp, U_B-2 V, I_{max} = 200 mA
	NOC/NCC adjustable, short-circuit-proof	NOC/NCC adjustable, short-circuit-proof

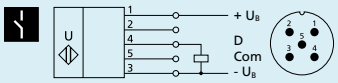

1 pnp switching output

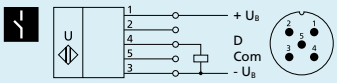

1 pnp switching output

mic-130

1.3 m

200 – 2,000 mm

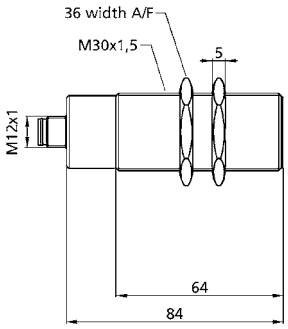

200 mm
1,300 mm
2,000 mm
please see ⓘ
200 kHz
0.18 mm
± 0.15 %
± 1 % (temperature drift internally compensated)
9 V to 30 V DC, reverse polarity protection
≤ 55 mA
brass sleeve, nickel-plated
plastic parts: PBT
ultrasonic transducer: polyurethane foam,
epoxy resin with glass content
IP 67
5-pin M12 initiator plug[2]
com input (pin 5)
• Teach-in via com input on pin 5
• LCA-2 with LinkControl
-25°C to +70°C
-40°C to +85°C
200 g
20 mm
8 Hz
92 ms
< 440 ms
mic-130/D/M
pnp, U_B-2 V, I_{max} = 200 mA
NOC/NCC adjustable, short-circuit-proof

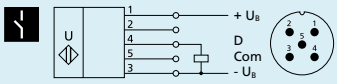

1 pnp switching output

[2] Model with cable on request.

mic-340

3.4 m

350 – 5,000 mm

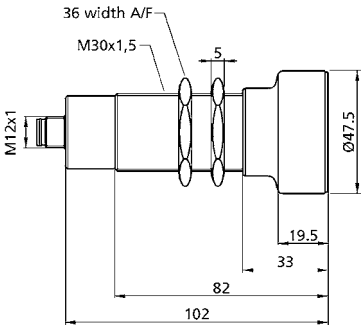

350 mm
3,400 mm
5,000 mm
please see ⓘ
120 kHz
0.18 mm
± 0.15 %
± 1 % (temperature drift internally compensated)
9 V to 30 V DC, reverse polarity protection
≤ 55 mA
brass sleeve, nickel-plated
plastic parts: PBT
ultrasonic transducer: polyurethane foam,
epoxy resin with glass content
IP 67
5-pin M12 initiator plug[2]
com input (pin 5)
• Teach-in via com input on pin 5
• LCA-2 with LinkControl
-25°C to +70°C
-40°C to +85°C
260 g
50 mm
4 Hz
172 ms
< 530 ms
mic-340/D/M
pnp, U_B-2 V, I_{max} = 200 mA
NOC/NCC adjustable, short-circuit-proof

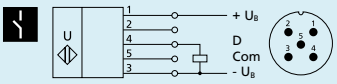

1 pnp switching output

[3] Can be programmed with LinkControl.

mic-600

6.0 m

600 – 8,000 mm

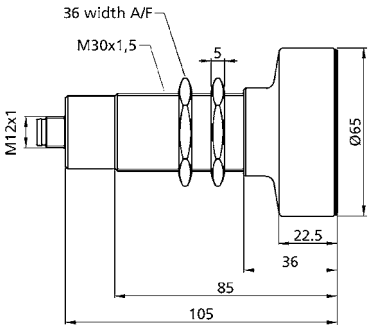

600 mm
6,000 mm
8,000 mm
please see ⓘ
80 kHz
0.18 mm
± 0.15 %
± 1 % (temperature drift internally compensated)
9 V to 30 V DC, reverse polarity protection
≤ 55 mA
brass sleeve, nickel-plated
plastic parts: PBT
ultrasonic transducer: polyurethane foam,
epoxy resin with glass content
IP 67
5-pin M12 initiator plug[2]
com input (pin 5)
• Teach-in via com input on pin 5
• LCA-2 with LinkControl
-25°C to +70°C
-40°C to +85°C
320 g
100 mm
3 Hz
240 ms
< 600 ms
mic-600/D/M
pnp, U_B-2 V, I_{max} = 200 mA
NOC/NCC adjustable, short-circuit-proof

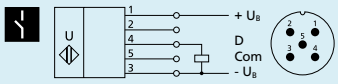

1 pnp switching output

	mic-25	mic-35
	0.25 m	0.35 m
measuring range	**30 – 350 mm**	**65 – 600 mm**

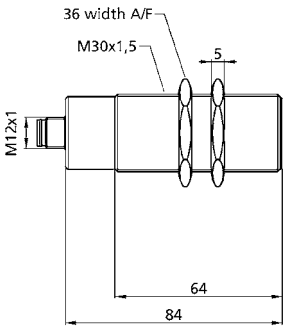

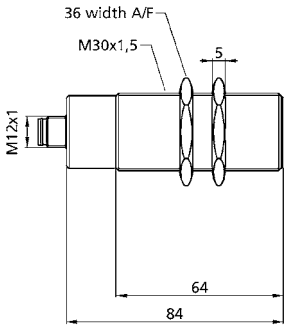

blind zone	30 mm	65 mm
operating range	250 mm	350 mm
maximum range	350 mm	600 mm
angle of beam spread	please see ⓘ	please see ⓘ
transducer frequency	320 kHz	400 kHz
resolution/sampling rate	0.18 mm	0.18 mm
reproducibility	± 0.15 %	± 0.15 %
accuracy	± 1 % (temperature drift internally compensated)	± 1 % (temperature drift internally compensated)
operating voltage U_B	9 V to 30 V DC, reverse polarity protection	9 V to 30 V DC, reverse polarity protection
no-load current consumption	≤ 55 mA	≤ 55 mA
housing	brass sleeve, nickel-plated	brass sleeve, nickel-plated
	plastic parts: PBT	plastic parts: PBT
	ultrasonic transducer: polyurethane foam,	ultrasonic transducer: polyurethane foam,
	epoxy resin with glass content	epoxy resin with glass content
class of protection according to EN 60529	IP 67	IP 67
type of connection	5-pin M12 initiator plug[2)]	5-pin M12 initiator plug[2)]
controls	com input (pin 5)	com input (pin 5)
scope for settings	• Teach-in via com input on pin 5	• Teach-in via com input on pin 5
	• LCA-2 with LinkControl	• LCA-2 with LinkControl
operating temperature	-25°C to +70°C	-25°C to +70°C
storage temperature	-40°C to +85°C	-40°C to +85°C
weight	200 g	200 g
response time[3)]	32 ms	64 ms
delay prior to availability	< 390 ms	< 420 ms
order number[2)]	**mic-25/IU/M**	**mic-35/IU/M**
analogue output	current output 4 – 20 mA	current output 4 – 20 mA
	voltage output 0 – 10 V (at $U_B \geq 15$ V),	voltage output 0 – 10 V (at $U_B \geq 15$ V),
	short-circuit-proof	short-circuit-proof
	switchable rising/falling	switchable rising/falling

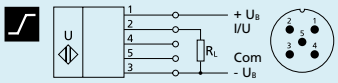

analogue output

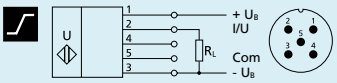

analogue output

mic-130

1.3 m

200 – 2,000 mm

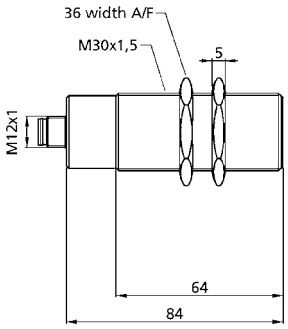

mic-340

3.4 m

350 – 5,000 mm

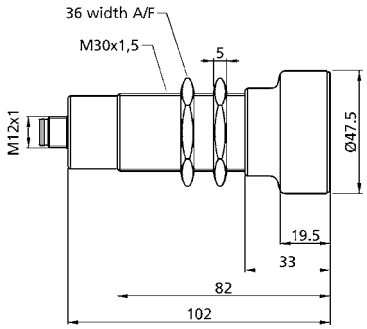

mic-600

6.0 m

600 – 8,000 mm

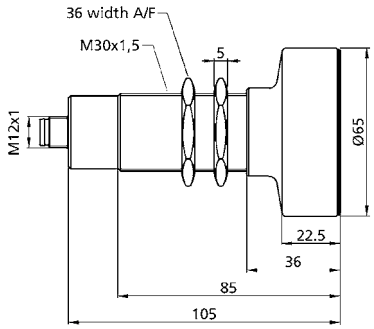

200 mm	350 mm	600 mm
1,300 mm	3,400 mm	6,000 mm
2,000 mm	5,000 mm	8,000 mm
please see ⓘ	please see ⓘ	please see ⓘ
200 kHz	120 kHz	80 kHz
0.18 mm to 0.57 mm, depending on	0.18 mm to 1.5 mm, depending on	0.18 mm to 2.4 mm, depending on
the analogue window	the analogue window	the analogue window
± 0.15 %	± 0.15 %	± 0.15 %
± 1 % (temperature drift internally compensated)	± 1 % (temperature drift internally compensated)	± 1 % (temperature drift internally compensated)
9 V to 30 V DC, reverse polarity protection	9 V to 30 V DC, reverse polarity protection	9 V to 30 V DC, reverse polarity protection
≤ 55 mA	≤ 55 mA	≤ 55 mA
brass sleeve, nickel-plated	brass sleeve, nickel-plated	brass sleeve, nickel-plated
plastic parts: PBT	plastic parts: PBT	plastic parts: PBT
ultrasonic transducer: polyurethane foam,	ultrasonic transducer: polyurethane foam,	ultrasonic transducer: polyurethane foam,
epoxy resin with glass content	epoxy resin with glass content	epoxy resin with glass content
IP 67	IP 67	IP 67
5-pin M12 initiator plug[2]	5-pin M12 initiator plug[2]	5-pin M12 initiator plug[2]
com input (pin 5)	com input (pin 5)	com input (pin 5)
• Teach-in via com input on pin 5	• Teach-in via com input on pin 5	• Teach-in via com input on pin 5
• LCA-2 with LinkControl	• LCA-2 with LinkControl	• LCA-2 with LinkControl
-25°C to +70°C	-25°C to +70°C	-25°C to +70°C
-40°C to +85°C	-40°C to +85°C	-40°C to +85°C
200 g	260 g	320 g
92 ms	172 ms	240 ms
< 440 ms	< 530 ms	< 600 ms
mic-130/IU/M	**mic-340/IU/M**	**mic-600/IU/M**
current output 4 – 20 mA	current output 4 – 20 mA	current output 4 – 20 mA
voltage output 0 – 10 V (at $U_B \geq 15$ V),	voltage output 0 – 10 V (at $U_B \geq 15$ V),	voltage output 0 – 10 V (at $U_B \geq 15$ V),
short-circuit-proof	short-circuit-proof	short-circuit-proof
switchable rising/falling	switchable rising/falling	switchable rising/falling

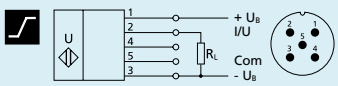

analogue output

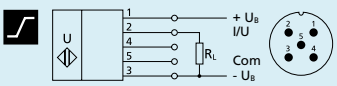

analogue output

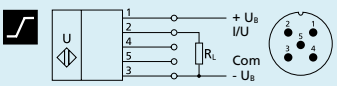

analogue output

[2] Model with cable on request.

[3] Can be programmed with LinkControl.

pico+

"The little guy" that can do it all: 4 ranges, 3 output signals, 2 housing variants and an IO-Link interface.

HIGHLIGHTS

- Variant with 90° angled head
- IO-Link interface › for support of the new industry standard
- Automatic synchronisation and multiplex operation › for simultaneous operation of up to ten sensors in close quarters
- UL Listed to Canadian and US safety standards
- Improved temperature compensation › adjustment to working conditions within 120 seconds

BASICS

- 1 Push-Pull switching output, pnp or npn basis
- Analogue output 4–20 mA or 0–10 V
- 4 detection ranges with a measurement range of 20 mm to 1.3 m
- microsonic Teach-in on pin 5
- 0.069 mm to 0.1 mm resolution
- 10–30 V operating voltage
- LinkControl › for configuration of sensors from a PC

IO-Link integrated

Also see the chapter "Function and advantages"

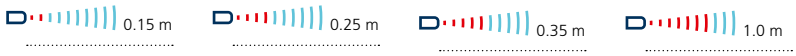

The pico+ ultrasonic sensors

are a cylindrical series with M18 threaded sleeves and a housing length of only 41 mm. In addition to the variants with an axial beam direction, there is also a housing variant with a 90° angled head and radial beam direction.

With four detection ranges from 20 mm to 1.3 m and three different output stages, this sensor family covers a wide range of applications.

Sensors with the Push-Pull output stage support SIO and IO-Link modes. Sensors with analogue output are optionally available with 4–20 mA current output or 0–10 V voltage output.

In SIO mode, sensors are configured using the microsonic Teach-in procedure on pin 5.

The sensors are listed to applicable UL Standards and requirements by UL for Canada and the US.

For the pico+ sensor family

there are two output stages and four detection ranges available:

- 1 Push-Pull switching output with pnp and npn switching technology
- 1 analogue output 4–20 mA or 0–10 V

Sensors with switching output have three operating modes:

- Single switching point
- Two-way reflective barrier
- Window mode

Teach-in of a single switching point

- Place object to be detected at the desired distance 1.
- Apply $+U_B$ to pin 5 for about 3 seconds.
- Then apply $+U_B$ to pin 5 again for about 1 second.

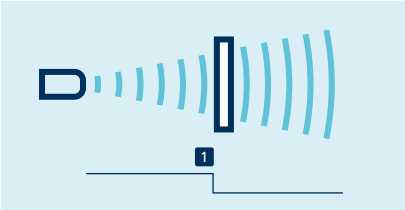

Teach-in of a switching point

Teach-in of a two-way reflective barrier

with a fixed reflector

- Apply $+U_B$ to pin 5 for about 3 seconds until both LEDs flash.
- Then apply $+U_B$ to pin 5 again for about 10 seconds.

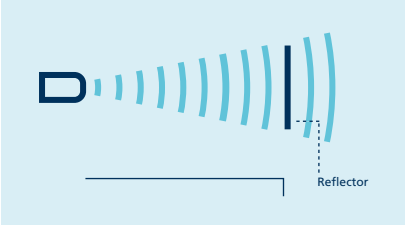

Teach-in of a two-way reflective barrier

For setting the analogue output

- Initially place the object to be detected at the sensor-close window limit 1.
- Apply $+U_B$ to pin 5 for about 3 seconds.
- Then move the object to the sensor-distant window limit 2.
- Then apply $+U_B$ to pin 5 again for about 1 second.

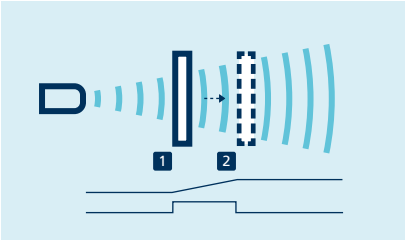

Teach-in of an analogue characteristic or a window with two switching points

NCC/NOC

and rising/falling analogue characteristic curve can also be set via pin 5.

One green and one yellow LED

indicate the state of the output and support microsonic Teach-in.

LinkControl

optionally permits the extensive parameterisation of sensors. The LCA-2 LinkControl adapter is available as an accessory and can be used to connect pico+ sensors to the PC.

Sensor connected to the PC via LCA-2 for programming

Easy to synchronise

A number of pico+ sensors can be run closely packed in applications synchronised to stop them from influencing one another. To this end, the sync mode has to be activated and all the sensors are to be electrically connected on to another with pin 5.

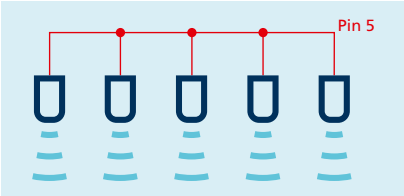

Synchronisation via pin 5

IO-Link integrated

in version 1.1 for sensors with switching output.

	pico+15	pico+25
	0.15 m	0.25 m
measuring range	**20 – 250 mm**	**30 – 350 mm**

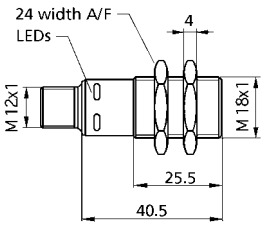

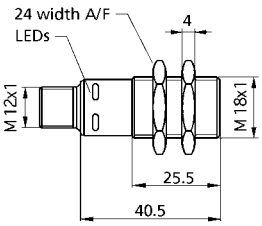

blind zone	20 mm	30 mm
operating range	150 mm	250 mm
maximum range	250 mm	350 mm
angle of beam spread	please see ⓘ	please see ⓘ
transducer frequency	380 kHz	320 kHz
resolution/sampling rate	0.1 mm	0.1 mm
reproducibility	± 0.15 %	± 0.15 %
accuracy	± 1 % (temperature drift internally compensated)	± 1 % (temperature drift internally compensated)
operating voltage U_B	10 V to 30 V DC, reverse polarity protection	10 V to 30 V DC, reverse polarity protection
no-load current consumption	≤ 40 mA	≤ 40 mA
housing	brass sleeve, nickel-plated, plastic parts: PBT; ultrasonic transducer: polyurethane foam, epoxy resin with glass content	brass sleeve, nickel-plated, plastic parts: PBT; ultrasonic transducer: polyurethane foam, epoxy resin with glass content
class of protection according to EN 60529	IP 67	IP 67
type of connection	5-pin M12 initiator plug	5-pin M12 initiator plug
controls	com input (pin 5)	com input (pin 5)
scope for settings	• Teach-in via com input on pin 5 • LCA-2 with LinkControl • IO-Link	• Teach-in via com input on pin 5 • LCA-2 with LinkControl • IO-Link
indicators	LED green: working, LED yellow: switch status	LED green: working, LED yellow: switch status
IO-Link	V 1.1	V 1.1
IO-Link SIO mode support	yes	yes
IO-Link min. cycle time	8.4 ms	8.4 ms
Smart Sensor Profile	-	-
operating temperature	-25°C to +70°C	-25°C to +70°C
storage temperature	-40°C to +85°C	-40°C to +85°C
weight	30 g	30 g
switching hysteresis[1]	2 mm	3 mm
switching frequency[1]	25 Hz	25 Hz
response time[1]	32 ms	32 ms
delay prior to availability	< 300 ms	< 300 ms
order number	**pico+15/F**	**pico+25/F**
switching output	Push-Pull, U_B-3 V, -U_B+3 V, I_{max} = 100 mA	Push-Pull, U_B-3 V, -U_B+3 V, I_{max} = 100 mA

Enclosure Type 1
For use only in industrial machinery NFPA 79 applications.

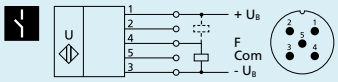

1 Push-Pull switching output

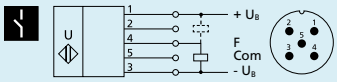

1 Push-Pull switching output

[1] Can be programmed with LinkControl and IO-Link.

pico+35	pico+100	
0.35 m	1.0 m	
65 – 600 mm	**120 – 1,300 mm**	

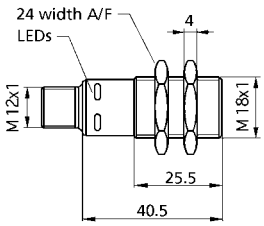

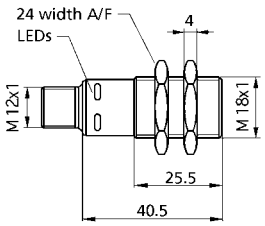

65 mm	120 mm	
350 mm	1,000 mm	
600 mm	1,300 mm	
please see ⓘ	please see ⓘ	
400 kHz	200 kHz	
0.1 mm	0.1 mm	
± 0.15 %	± 0.15 %	
± 1 % (temperature drift internally compensated)	± 1 % (temperature drift internally compensated)	
10 V to 30 V DC, reverse polarity protection	10 V to 30 V DC, reverse polarity protection	
≤ 40 mA	≤ 40 mA	
brass sleeve, nickel-plated, plastic parts: PBT;	brass sleeve, nickel-plated, plastic parts: PBT;	
ultrasonic transducer: polyurethane foam,	ultrasonic transducer: polyurethane foam,	
epoxy resin with glass content	epoxy resin with glass content	
IP 67	IP 67	
5-pin M12 initiator plug	5-pin M12 initiator plug	
com input (pin 5)	com input (pin 5)	
• Teach-in via com input on pin 5	• Teach-in via com input on pin 5	
• LCA-2 with LinkControl	• LCA-2 with LinkControl	
• IO-Link	• IO-Link	
LED green: working, LED yellow: switch status	LED green: working, LED yellow: switch status	
V 1.1	V 1.1	
yes	yes	
16 ms	20.4 ms	
-	-	
-25°C to +70°C	-25°C to +70°C	
-40°C to +85°C	-40°C to +85°C	
30 g	30 g	
5 mm	20 mm	
12 Hz	10 Hz	
64 ms	80 ms	
< 300 ms	< 300 ms	
pico+35/F	**pico+100/F**	
Push-Pull, U_B-3 V, -U_B+3 V, I_{max} = 100 mA	Push-Pull, U_B-3 V, -U_B+3 V, I_{max} = 100 mA	

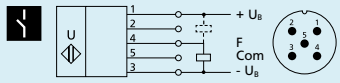

1 Push-Pull switching output

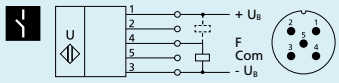

1 Push-Pull switching output

	pico+15	pico+25
	0.15 m	0.25 m
measuring range	**20–250 mm**	**30–350 mm**

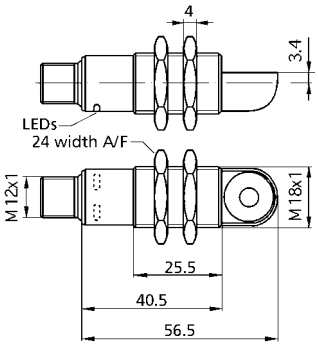

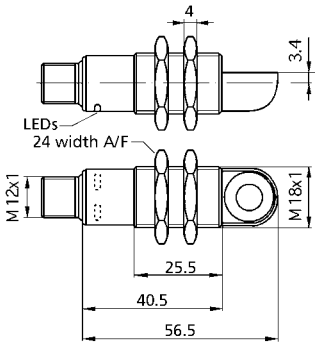

blind zone	20 mm	30 mm
operating range	150 mm	250 mm
maximum range	250 mm	350 mm
angle of beam spread	please see ⓘ	please see ⓘ
transducer frequency	380 kHz	320 kHz
resolution/sampling rate	0.1 mm	0.1 mm
reproducibility	± 0.15 %	± 0.15 %
accuracy	± 1 % (temperature drift internally compensated)	± 1 % (temperature drift internally compensated)
operating voltage U_B	10 V to 30 V DC, reverse polarity protection	10 V to 30 V DC, reverse polarity protection
no-load current consumption	≤ 40 mA	≤ 40 mA
housing	brass sleeve, nickel-plated, plastic parts: PBT; ultrasonic transducer: polyurethane foam, epoxy resin with glass content	brass sleeve, nickel-plated, plastic parts: PBT; ultrasonic transducer: polyurethane foam, epoxy resin with glass content
class of protection according to EN 60529	IP 67	IP 67
type of connection	5-pin M12 initiator plug	5-pin M12 initiator plug
controls	com input (pin 5)	com input (pin 5)
scope for settings	• Teach-in via com input on pin 5 • LCA-2 with LinkControl • IO-Link	• Teach-in via com input on pin 5 • LCA-2 with LinkControl • IO-Link
indicators	LED green: working, LED yellow: switch status	LED green: working, LED yellow: switch status
IO-Link	V 1.1	V 1.1
IO-Link SIO mode support	yes	yes
IO-Link min. cycle time	8.4 ms	8.4 ms
Smart Sensor Profile	-	-
operating temperature	-25°C to +70°C	-25°C to +70°C
storage temperature	-40°C to +85°C	-40°C to +85°C
weight	35 g	35 g
switching hysteresis[1]	2 mm	3 mm
switching frequency[1]	25 Hz	25 Hz
response time[1]	32 ms	32 ms
delay prior to availability	< 300 ms	< 300 ms
order number	**pico+15/WK/F**	**pico+25/WK/F**
switching output	Push-Pull, U_B-3 V, -U_B+3 V, I_{max} = 100 mA	Push-Pull, U_B-3 V, -U_B+3 V, I_{max} = 100 mA

Enclosure Type 1
For use only in industrial machinery NFPA 79 applications.

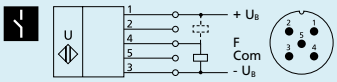

1 Push-Pull switching output

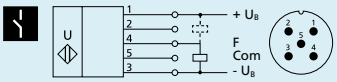

1 Push-Pull switching output

[1] Can be programmed with LinkControl and IO-Link.

pico+35	pico+100	
0.35 m	1.0 m	
65–600 mm	**120–1,300 mm**	

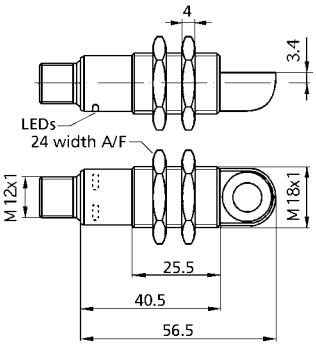

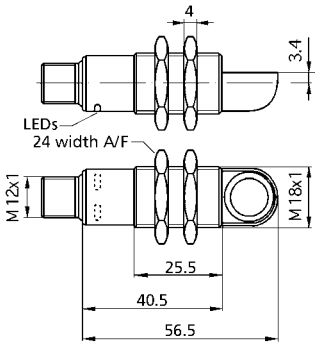

65 mm	120 mm	
350 mm	1,000 mm	
600 mm	1,300 mm	
please see ⓘ	please see ⓘ	
400 kHz	200 kHz	
0.1 mm	0.1 mm	
± 0.15 %	± 0.15 %	
± 1 % (temperature drift internally compensated)	± 1 % (temperature drift internally compensated)	
10 V to 30 V DC, reverse polarity protection	10 V to 30 V DC, reverse polarity protection	
≤ 40 mA	≤ 40 mA	
brass sleeve, nickel-plated, plastic parts: PBT;	brass sleeve, nickel-plated, plastic parts: PBT;	
ultrasonic transducer: polyurethane foam,	ultrasonic transducer: polyurethane foam,	
epoxy resin with glass content	epoxy resin with glass content	
IP 67	IP 67	
5-pin M12 initiator plug	5-pin M12 initiator plug	
com input (pin 5)	com input (pin 5)	
• Teach-in via com input on pin 5	• Teach-in via com input on pin 5	
• LCA-2 with LinkControl	• LCA-2 with LinkControl	
• IO-Link	• IO-Link	
LED green: working, LED yellow: switch status	LED green: working, LED yellow: switch status	
V 1.1	V 1.1	
yes	yes	
16 ms	20.4 ms	
-	-	
-25°C to +70°C	-25°C to +70°C	
-40°C to +85°C	-40°C to +85°C	
35 g	35 g	
5 mm	20 mm	
12 Hz	10 Hz	
64 ms	80 ms	
< 300 ms	< 300 ms	
pico+35/WK/F	**pico+100/WK/F**	
Push-Pull, U_B-3 V, -U_B+3 V, I_{max} = 100 mA	Push-Pull, U_B-3 V, -U_B+3 V, I_{max} = 100 mA	

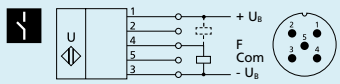

1 Push-Pull switching output

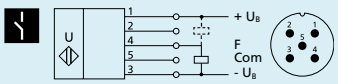

1 Push-Pull switching output

	pico+15	pico+25
	0.15 m	0.25 m
measuring range	**20–250 mm**	**30–350 mm**

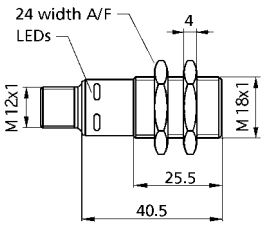

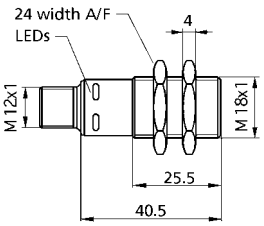

blind zone	20 mm	30 mm
operating range	150 mm	250 mm
maximum range	250 mm	350 mm
angle of beam spread	please see ⓘ	please see ⓘ
transducer frequency	380 kHz	320 kHz
resolution/sampling rate	0.069 mm	0.069 mm to 0.1 mm, depending on the analogue window
reproducibility	± 0.15 %	± 0.15 %
accuracy	± 1 % (temperature drift internally compensated)	± 1 % (temperature drift internally compensated)
operating voltage U_B	10 V to 30 V DC, reverse polarity protection	10 V to 30 V DC, reverse polarity protection
no-load current consumption	≤ 40 mA	≤ 40 mA
housing	brass sleeve, nickel-plated, plastic parts: PBT; ultrasonic transducer: polyurethane foam, epoxy resin with glass content	brass sleeve, nickel-plated, plastic parts: PBT; ultrasonic transducer: polyurethane foam, epoxy resin with glass content
class of protection according to EN 60529	IP 67	IP 67
type of connection	5-pin M12 initiator plug	5-pin M12 initiator plug
controls	com input (pin 5)	com input (pin 5)
scope for settings	• Teach-in via com input on pin 5 • LCA-2 with LinkControl	• Teach-in via com input on pin 5 • LCA-2 with LinkControl
indicators	LED green: working, LED yellow: object in the window	LED green: working, LED yellow: object in the window
operating temperature	-25°C to +70°C	-25°C to +70°C
storage temperature	-40°C to +85°C	-40°C to +85°C
weight	30 g	30 g
response time	32 ms	32 ms
delay prior to availability	< 300 ms	< 300 ms
order number	**pico+15/I**	**pico+25/I**
analogue output	current output 4–20 mA switchable rising/falling	current output 4–20 mA switchable rising/falling

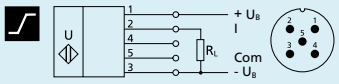

analogue output 4–20 mA

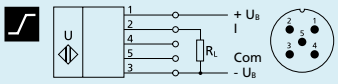

analogue output 4–20 mA

order number	**pico+15/U**	**pico+25/U**
analogue output	voltage output 0–10 V (at $U_B \geq 15$ V) short-circuit-proof, switchable rising/falling	voltage output 0–10 V (at $U_B \geq 15$ V) short-circuit-proof, switchable rising/falling

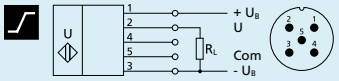

analogue output 0–10 V

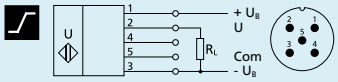

analogue output 0–10 V

c UL us LISTED

Enclosure Type 1
For use only in industrial machinery NFPA 79 applications.

pico+35	pico+100	
0.35 m	1.0 m	
65–600 mm	**120–1,300 mm**	

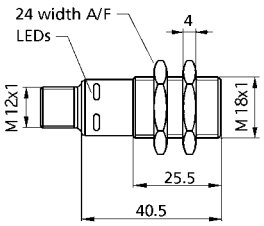

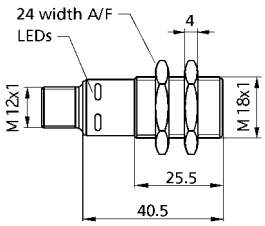

65 mm	120 mm	
350 mm	1,000 mm	
600 mm	1,300 mm	
please see ⓘ	please see ⓘ	
400 kHz	200 kHz	
0.069 mm to 0.17 mm, depending on	0.069 mm to 0.38 mm, depending on	
the analogue window	the analogue window	
± 0.15 %	± 0.15 %	
± 1 % (temperature drift internally compensated)	± 1 % (temperature drift internally compensated)	
10 V to 30 V DC, reverse polarity protection	10 V to 30 V DC, reverse polarity protection	
≤ 40 mA	≤ 40 mA	
brass sleeve, nickel-plated, plastic parts: PBT;	brass sleeve, nickel-plated, plastic parts: PBT;	
ultrasonic transducer: polyurethane foam,	ultrasonic transducer: polyurethane foam,	
epoxy resin with glass content	epoxy resin with glass content	
IP 67	IP 67	
5-pin M12 initiator plug	5-pin M12 initiator plug	
com input (pin 5)	com input (pin 5)	
• Teach-in via com input on pin 5	• Teach-in via com input on pin 5	
• LCA-2 with LinkControl	• LCA-2 with LinkControl	
LED green: working, LED yellow: object in the window	LED green: working, LED yellow: object in the window	
-25°C to +70°C	-25°C to +70°C	
-40°C to +85°C	-40°C to +85°C	
30 g	30 g	
64 ms	80 ms	
< 300 ms	< 300 ms	
pico+35/I	**pico+100/I**	
current output 4–20 mA	current output 4–20 mA	
switchable rising/falling	switchable rising/falling	

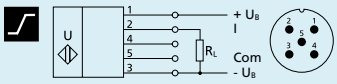

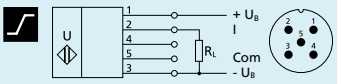

analogue output 4–20 mA

analogue output 4–20 mA

pico+35/U	**pico+100/U**	
voltage output 0–10 V (at $U_B \geq 15$ V)	voltage output 0–10 V (at $U_B \geq 15$ V)	
short-circuit-proof, switchable rising/falling	short-circuit-proof, switchable rising/falling	

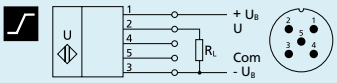

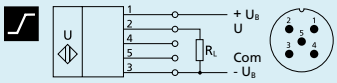

analogue output 0–10 V

analogue output 0–10 V

	pico+15	pico+25
	0.15 m	0.25 m
measuring range	**20–250 mm**	**30–350 mm**

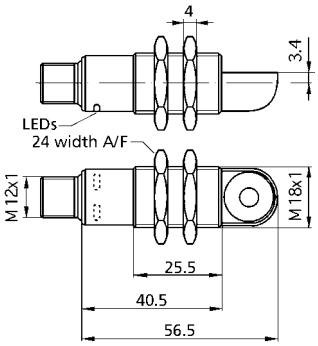

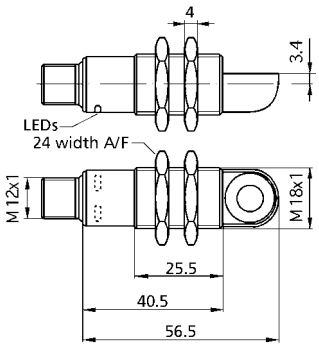

blind zone	20 mm	30 mm
operating range	150 mm	250 mm
maximum range	250 mm	350 mm
angle of beam spread	please see ⓘ	please see ⓘ
transducer frequency	380 kHz	320 kHz
resolution/sampling rate	0.069 mm	0.069 mm to 0.1 mm, depending on the analogue window
reproducibility	± 0.15 %	± 0.15 %
accuracy	± 1 % (temperature drift internally compensated)	± 1 % (temperature drift internally compensated)
operating voltage U_B	10 V to 30 V DC, reverse polarity protection	10 V to 30 V DC, reverse polarity protection
no-load current consumption	≤ 40 mA	≤ 40 mA
housing	brass sleeve, nickel-plated, plastic parts: PBT; ultrasonic transducer: polyurethane foam, epoxy resin with glass content	brass sleeve, nickel-plated, plastic parts: PBT; ultrasonic transducer: polyurethane foam, epoxy resin with glass content
class of protection according to EN 60529	IP 67	IP 67
type of connection	5-pin M12 initiator plug	5-pin M12 initiator plug
controls	com input (pin 5)	com input (pin 5)
scope for settings	• Teach-in via com input on pin 5 • LCA-2 with LinkControl	• Teach-in via com input on pin 5 • LCA-2 with LinkControl
indicators	LED green: working, LED yellow: object in the window	LED green: working, LED yellow: object in the window
operating temperature	-25°C to +70°C	-25°C to +70°C
storage temperature	-40°C to +85°C	-40°C to +85°C
weight	35 g	35 g
response time	32 ms	32 ms
delay prior to availability	< 300 ms	< 300 ms
order number	**pico+15/WK/I**	**pico+25/WK/I**
analogue output	current output 4–20 mA switchable rising/falling	current output 4–20 mA switchable rising/falling

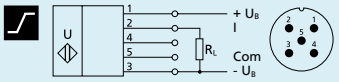

analogue output 4–20 mA

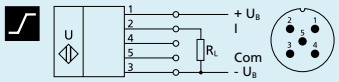

analogue output 4–20 mA

order number	**pico+15/WK/U**	**pico+25/WK/U**
analogue output	voltage output 0–10 V (at $U_B \geq 15$ V) short-circuit-proof, switchable rising/falling	voltage output 0–10 V (at $U_B \geq 15$ V) short-circuit-proof, switchable rising/falling

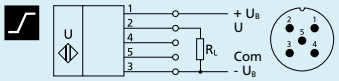

analogue output 0–10 V

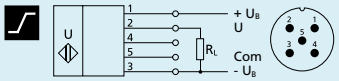

analogue output 0–10 V

Enclosure Type 1
For use only in industrial machinery NFPA 79 applications.

pico+35	pico+100
0.35 m	1.0 m
65–600 mm	**120–1,300 mm**

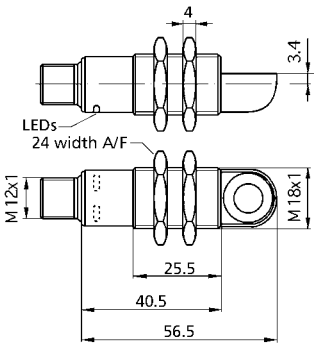

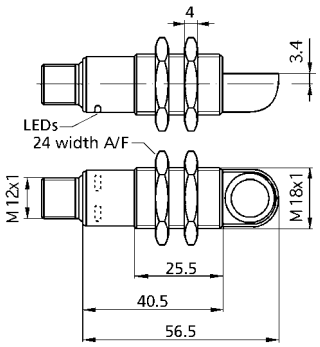

65 mm	120 mm
350 mm	1,000 mm
600 mm	1,300 mm
please see ⓘ	please see ⓘ
400 kHz	200 kHz
0.069 mm to 0.17 mm, depending on	0.069 mm to 0.38 mm, depending on
the analogue window	the analogue window
± 0.15 %	± 0.15 %
± 1 % (temperature drift internally compensated)	± 1 % (temperature drift internally compensated)
10 V to 30 V DC, reverse polarity protection	10 V to 30 V DC, reverse polarity protection
≤ 40 mA	≤ 40 mA
brass sleeve, nickel-plated, plastic parts: PBT;	brass sleeve, nickel-plated, plastic parts: PBT;
ultrasonic transducer: polyurethane foam,	ultrasonic transducer: polyurethane foam,
epoxy resin with glass content	epoxy resin with glass content
IP 67	IP 67
5-pin M12 initiator plug	5-pin M12 initiator plug
com input (pin 5)	com input (pin 5)
• Teach-in via com input on pin 5	• Teach-in via com input on pin 5
• LCA-2 with LinkControl	• LCA-2 with LinkControl
LED green: working, LED yellow: object in the window	LED green: working, LED yellow: object in the window
-25°C to +70°C	-25°C to +70°C
-40°C to +85°C	-40°C to +85°C
35 g	35 g
64 ms	80 ms
< 300 ms	< 300 ms

pico+35/WK/I	**pico+100/WK/I**
current output 4–20 mA	current output 4–20 mA
switchable rising/falling	switchable rising/falling

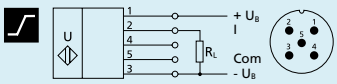

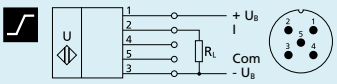

analogue output 4–20 mA

analogue output 4–20 mA

pico+35/WK/U	**pico+100/WK/U**
voltage output 0–10 V (at $U_B \geq 15$ V)	voltage output 0–10 V (at $U_B \geq 15$ V)
short-circuit-proof, switchable rising/falling	short-circuit-proof, switchable rising/falling

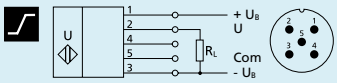

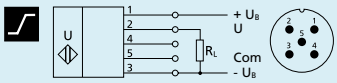

analogue output 0–10 V

analogue output 0–10 V

lpc+

lpc+ well equipped: 2 Push-Pull switching outputs or 1 Push-Pull switching output with an analogue output in M18 housing.

HIGHLIGHTS

- Analogue output 4–20 mA or 0–10 V plus 1 Push-Pull switching output in M18 design
- IO-Link interface › for support of the new industry standard
- Smart Sensor Profile
- Improved temperature compensation › adjustments to working conditions within 120 seconds

BASICS

- 2 Push-Pull switching outputs, pnp or npn basis
- 4 detection ranges with a measurement range of 20 mm to 1.3 m
- microsonic Teach-in on pin 5
- 0.1 mm resolution
- 10–30 V operating voltage
- LinkControl › for configuration of sensors from a PC

IO-Link integrated

Also see the chapter "Function and advantages"

The lpc+ ultrasonic sensors

are optionally equipped with two Push-Pull switching outputs or an analogue output plus a Push-Pull switching output. The compact series with M18 threaded sleeves covers four detection ranges from 20 mm to 1.3 m.

Ultrasonic sensors with the Push-Pull output stage support SIO and IO-Link modes. Sensors with analogue output are optionally available with 4–20 mA current output or 0–10 V voltage output. In SIO mode, sensors are configured using the microsonic Teach-in procedure on pin 5.

For the lpc+ sensor family

there are 2 output stages and 4 detection ranges available:

- 2 Push-Pull switching outputs with pnp or npn switching technology
- 1 Push-Pull switching output and analogue output 4–20 mA or 0–10 V

Ultrasonic sensors with switching output have three operating modes:

- Single switching point
- Two-way reflective barrier
- Window mode

Teach-in of a single switching point

- Place object to be detected at the desired distance 1
- Apply $+U_B$ to pin 5 for about 3 seconds
- Then apply $+U_B$ to pin 5 again for about 1 second

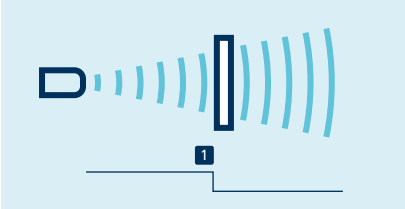

Teach-in of a switching point

Teach-in of a two-way reflective barrier

with a fixed reflector

- Apply $+U_B$ to pin 2 for about 3 seconds
- Then apply $+U_B$ to pin 2 again for about 10 seconds

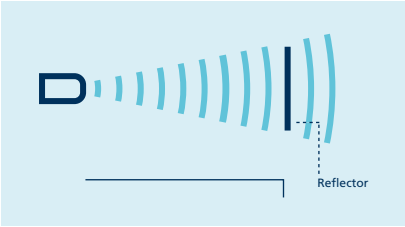

Teach-in of a two-way reflective barrier

For configuration of a window

- Place object at the near edge of the window 1
- Apply $+U_B$ to pin 5 for about 3 seconds
- Then move the object to the far edge of the window 2
- Then apply $+U_B$ to pin 5 again for about 1 second

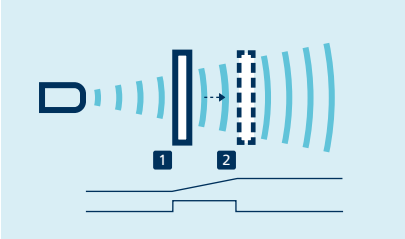

Teach-in of an analogue characteristic or a window with two switching points

NCC/NOC

and rising/falling analogue characteristic curve can also be set via pin 5.

Two green and two yellow LEDs

indicate the state of the output and support microsonic Teach-in.

LinkControl

optionally permits the extensive parameterisation of lpc+ sensors. The LCA-2 LinkControl adapter, which is available as an accessory, can be used to connect lpc+ sensors to the PC.

Sensor connected to the PC via LCA-2 for programming

Easy to synchronise

A number of lpc+ ultrasonic sensors can be run closely packed in applications synchronised to stop them from influencing one another. To this end, the sync mode has to be activated and all the sensors are to be electrically connected one to another with pin 5.

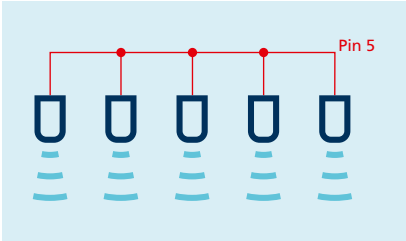

Synchronisation via pin 5

IO-Link integrated

in version 1.1. The lpc+ ultrasonic sensors are equipped with Smart Sensor Profile, which creates more transparency between IO-Link devices.

	lpc+15	lpc+25
	0.15 m	0.25 m
measuring range	**20 – 250 mm**	**30 – 350 mm**

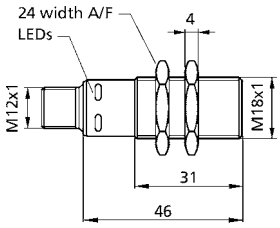

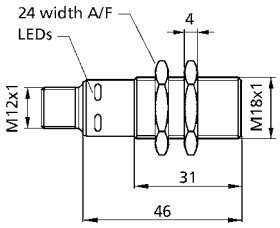

blind zone	20 mm	30 mm
operating range	150 mm	250 mm
maximum range	250 mm	350 mm
angle of beam spread	please see ⓘ	please see ⓘ
transducer frequency	380 kHz	320 kHz
resolution/sampling rate	0.1 mm	0.1 mm
reproducibility	± 0.15 %	± 0.15 %
accuracy	± 1 % (temperature drift internally compensated)	± 1 % (temperature drift internally compensated)
operating voltage U_B	10 to 30 V DC, reverse polarity protection	10 to 30 V DC, reverse polarity protection
no-load current consumption	≤ 60 mA	≤ 60 mA
housing	brass sleeve, nickel-plated: PBT, PA;	brass sleeve, nickel-plated: PBT, PA;
	ultrasonic transducer: polyurethane foam,	ultrasonic transducer: polyurethane foam,
	epoxy resin with glass content	epoxy resin with glass content
type of connection	5-pin M12 initiator plug	5-pin M12 initiator plug
controls	com input (pin 5)	com input (pin 5)
scope for settings	• Teach-in via com input on pin 5	• Teach-in via com input on pin 5
	• LCA-2 with LinkControl	• LCA-2 with LinkControl
	• IO-Link	• IO-Link
indicators	LED green: working, LED yellow: switch status	LED green: working, LED yellow: switch status
IO-Link	V 1.1	V 1.1
IO-Link SIO mode support	yes	yes
IO-Link min. cycle time	8 ms	8 ms
Smart Sensor Profile	yes	yes
operating temperature	-25°C to +70°C	-25°C to +70°C
storage temperature	-40°C to +85°C	-40°C to +85°C
weight	35 g	35 g
switching hysteresis[1]	2 mm	3 mm
switching frequency[1]	25 Hz	25 Hz
response time	32 ms	32 ms
delay prior to availability	< 300 ms	< 300 ms
order number	**lpc+15/CFF**	**lpc+25/CFF**
switching output	2 x Push-Pull, U_B-1 V, -U_B+1 V, I_{max} = 2 x 100 mA	2 x Push-Pull, U_B-1 V, -U_B+1 V, I_{max} = 2 x 100 mA

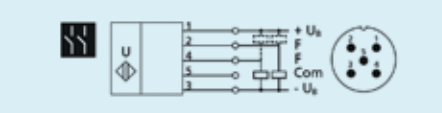

2 Push-Pull switching outputs

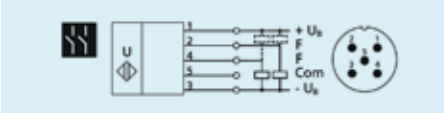

2 Push-Pull switching outputs

[1] Can be programmed with LinkControl and IO-Link.

Ipc+35	Ipc+100	
0.35 m	1.0 m	
65 – 600 mm	**120 – 1,300 mm**	

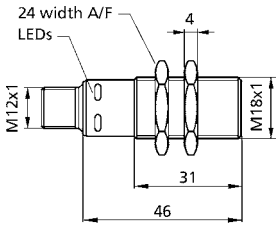

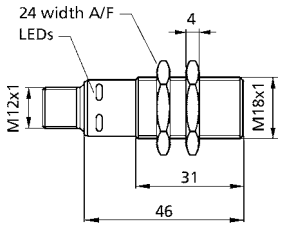

65 mm	120 mm	
350 mm	1,000 mm	
600 mm	1,300 mm	
please see ⓘ	please see ⓘ	
400 kHz	200 kHz	
0.1 mm	0.1 mm	
± 0.15 %	± 0.15 %	
± 1 % (temperature drift internally compensated)	± 1 % (temperature drift internally compensated)	
10 to 30 V DC, reverse polarity protection	10 to 30 V DC, reverse polarity protection	
≤ 60 mA	≤ 60 mA	
brass sleeve, nickel-plated: PBT, PA;	brass sleeve, nickel-plated: PBT, PA;	
ultrasonic transducer: polyurethane foam,	ultrasonic transducer: polyurethane foam,	
epoxy resin with glass content	epoxy resin with glass content	
5-pin M12 initiator plug	5-pin M12 initiator plug	
com input (pin 5)	com input (pin 5)	
• Teach-in via com input on pin 5	• Teach-in via com input on pin 5	
• LCA-2 with LinkControl	• LCA-2 with LinkControl	
• IO-Link	• IO-Link	
LED green: working, LED yellow: switch status	LED green: working, LED yellow: switch status	
V 1.1	V 1.1	
yes	yes	
16 ms	20 ms	
yes	yes	
-25°C to +70°C	-25°C to +70°C	
-40°C to +85°C	-40°C to +85°C	
35 g	35 g	
5 mm	20 mm	
12 Hz	10 Hz	
64 ms	80 ms	
< 300 ms	< 300 ms	
Ipc+35/CFF	**Ipc+100/CFF**	
2 x Push-Pull, U_B-1 V, -U_B+1 V, I_{max} = 2 x 100 mA	2 x Push-Pull, U_B-1 V, -U_B+1 V, I_{max} = 2 x 100 mA	

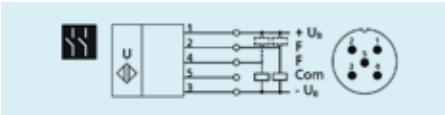

2 Push-Pull switching outputs

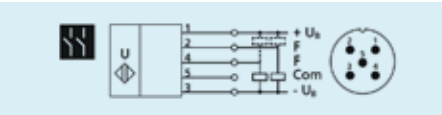

2 Push-Pull switching outputs

	lpc+15	lpc+25
	0.15 m	0.25 m
measuring range	**20 – 250 mm**	**30 – 350 mm**

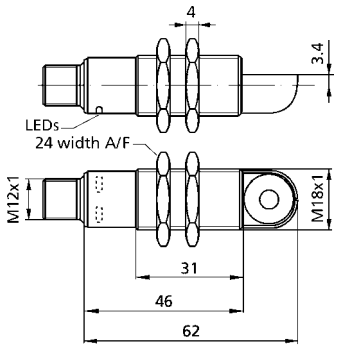

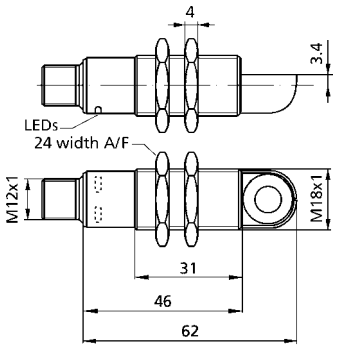

blind zone	20 mm	30 mm
operating range	150 mm	250 mm
maximum range	250 mm	350 mm
angle of beam spread	please see ⓘ	please see ⓘ
transducer frequency	380 kHz	320 kHz
resolution/sampling rate	0.1 mm	0.1 mm
reproducibility	± 0.15 %	± 0.15 %
accuracy	± 1 % (temperature drift internally compensated)	± 1 % (temperature drift internally compensated)
operating voltage U_B	10 to 30 V DC, reverse polarity protection	10 to 30 V DC, reverse polarity protection
no-load current consumption	≤ 60 mA	≤ 60 mA
housing	brass sleeve, nickel-plated: PBT, PA;	brass sleeve, nickel-plated: PBT, PA;
	ultrasonic transducer: polyurethane foam,	ultrasonic transducer: polyurethane foam,
	epoxy resin with glass content	epoxy resin with glass content
type of connection	5-pin M12 initiator plug	5-pin M12 initiator plug
controls	com input (pin 5)	com input (pin 5)
scope for settings	• Teach-in via com input on pin 5	• Teach-in via com input on pin 5
	• LCA-2 with LinkControl	• LCA-2 with LinkControl
	• IO-Link	• IO-Link
indicators	LED green: working, LED yellow: switch status	LED green: working, LED yellow: switch status
IO-Link	V 1.1	V 1.1
IO-Link SIO mode support	yes	yes
IO-Link min. cycle time	8 ms	8 ms
Smart Sensor Profile	yes	yes
operating temperature	-25°C to +70°C	-25°C to +70°C
storage temperature	-40°C to +85°C	-40°C to +85°C
weight	40 g	40 g
switching hysteresis[1]	2 mm	3 mm
switching frequency[1]	25 Hz	25 Hz
response time	32 ms	32 ms
delay prior to availability	< 300 ms	< 300 ms
order number	**lpc+15/WK/CFF**	**lpc+25/WK/CFF**
switching output	2 x Push-Pull, U_B-1 V, -U_B+1 V, I_{max} = 2 x 100 mA	2 x Push-Pull, U_B-1 V, -U_B+1 V, I_{max} = 2 x 100 mA

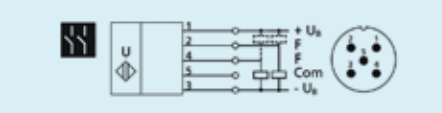

2 Push-Pull switching outputs

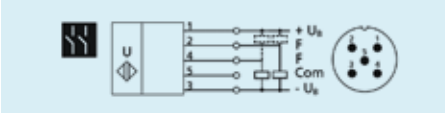

2 Push-Pull switching outputs

[1] Can be programmed with LinkControl and IO-Link.

Ipc+35	Ipc+100	
0.35 m	1.0 m	
65 – 600 mm	**120 – 1,300 mm**	

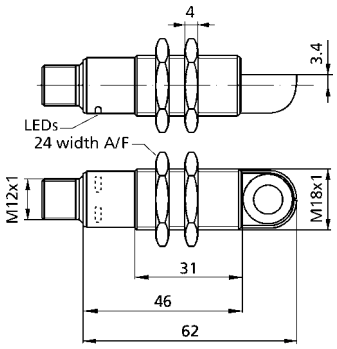

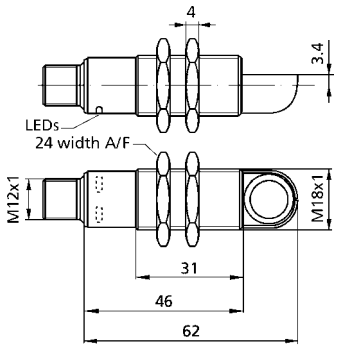

65 mm	120 mm	
350 mm	1,000 mm	
600 mm	1,300 mm	
please see ⓘ	please see ⓘ	
400 kHz	200 kHz	
0.1 mm	0.1 mm	
± 0.15 %	± 0.15 %	
± 1 % (temperature drift internally compensated)	± 1 % (temperature drift internally compensated)	
10 to 30 V DC, reverse polarity protection	10 to 30 V DC, reverse polarity protection	
≤ 60 mA	≤ 60 mA	
brass sleeve, nickel-plated: PBT, PA;	brass sleeve, nickel-plated: PBT, PA;	
ultrasonic transducer: polyurethane foam,	ultrasonic transducer: polyurethane foam,	
epoxy resin with glass content	epoxy resin with glass content	
5-pin M12 initiator plug	5-pin M12 initiator plug	
com input (pin 5)	com input (pin 5)	
• Teach-in via com input on pin 5	• Teach-in via com input on pin 5	
• LCA-2 with LinkControl	• LCA-2 with LinkControl	
• IO-Link	• IO-Link	
LED green: working, LED yellow: switch status	LED green: working, LED yellow: switch status	
V 1.1	V 1.1	
yes	yes	
16 ms	20 ms	
yes	yes	
-25°C to +70°C	-25°C to +70°C	
-40°C to +85°C	-40°C to +85°C	
40 g	40 g	
5 mm	20 mm	
12 Hz	10 Hz	
64 ms	80 ms	
< 300 ms	< 300 ms	
Ipc+35/WK/CFF	**Ipc+100/WK/CFF**	
2 x Push-Pull, U_B-1 V, -U_B+1 V, I_{max} = 2 x 100 mA	2 x Push-Pull, U_B-1 V, -U_B+1 V, I_{max} = 2 x 100 mA	

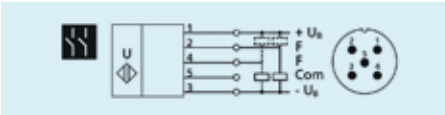

2 Push-Pull switching outputs

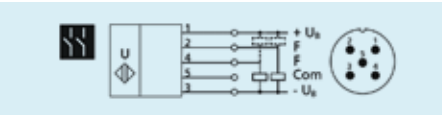

2 Push-Pull switching outputs

	lpc+15	lpc+25
	0.15 m	0.25 m
measuring range	**20 – 250 mm**	**30 – 350 mm**

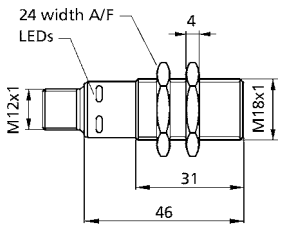

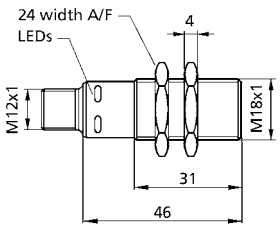

	lpc+15	lpc+25
blind zone	20 mm	30 mm
operating range	150 mm	250 mm
maximum range	250 mm	350 mm
angle of beam spread	please see ⓘ	please see ⓘ
transducer frequency	380 kHz	320 kHz
resolution/sampling rate	0.1 mm	0.1 mm
reproducibility	± 0.15 %	± 0.15 %
accuracy	± 1 % (temperature drift internally compensated)	± 1 % (temperature drift internally compensated)
operating voltage U_B	10 to 30 V DC, reverse polarity protection	10 to 30 V DC, reverse polarity protection
no-load current consumption	≤ 60 mA	≤ 60 mA
housing	brass sleeve, nickel-plated: PBT, PA; ultrasonic transducer: polyurethane foam, epoxy resin with glass content	brass sleeve, nickel-plated: PBT, PA; ultrasonic transducer: polyurethane foam, epoxy resin with glass content
type of connection	5-pin M12 initiator plug	5-pin M12 initiator plug
controls	com input	com input
scope for settings	• Teach-in via com input on pin 5 • LCA-2 with LinkControl • IO-Link	• Teach-in via com input on pin 5 • LCA-2 with LinkControl • IO-Link
indicators	LED green: working, LED yellow: switch status	LED green: working, LED yellow: switch status
IO-Link	V 1.1	V 1.1
IO-Link SIO mode support	yes	yes
IO-Link min. cycle time	8 ms	8 ms
Smart Sensor Profile	yes	yes
operating temperature	-25°C to +70°C	-25°C to +70°C
storage temperature	-40°C to +85°C	-40°C to +85°C
weight	35 g	35 g
switching hysteresis[1]	2 mm	3 mm
switching frequency[1]	25 Hz	25 Hz
response time	32 ms	32 ms
delay prior to availability	< 300 ms	< 300 ms
order number	**lpc+15/CFI**	**lpc+25/CFI**
switching output	Push-Pull, U_B-1 V, -U_B+1 V, I_{max} = 100 mA	Push-Pull, U_B-1 V, -U_B+1 V, I_{max} = 100 mA
analogue output	current output 4–20 mA, switchable rising/falling	current output 4–20 mA, switchable rising/falling

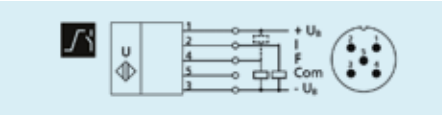

1 Push-Pull switching output + analogue output 4–20 mA

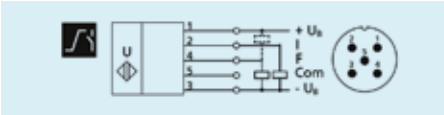

1 Push-Pull switching output + analogue output 4–20 mA

	lpc+15	lpc+25
order number	**lpc+15/CFU**	**lpc+25/CFU**
switching output	Push-Pull, U_B-1 V, -U_B+1 V, I_{max} = 100 mA	Push-Pull, U_B-1 V, -U_B+1 V, I_{max} = 100 mA
analogue output	voltage output 0–10 V (at $U_B \geq 15$ V) short-circuit-proof, switchable rising/falling	voltage output 0–10 V (at $U_B \geq 15$ V) short-circuit-proof, switchable rising/falling

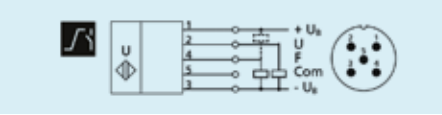

1 Push-Pull switching output + analogue output 0–10 V

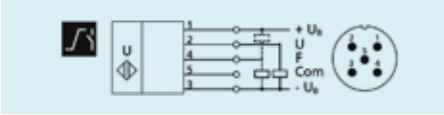

1 Push-Pull switching output + analogue output 0–10 V

[1] Can be programmed with LinkControl and IO-Link.

Ipc+35	Ipc+100	
0.35 m	1.0 m	
65–600 mm	**120–1,300 mm**	

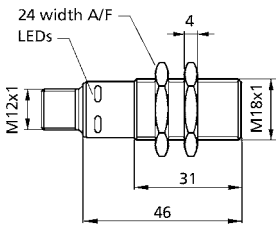

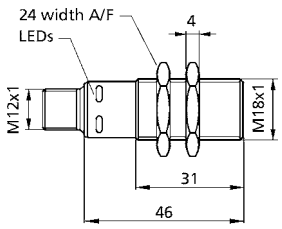

65 mm	120 mm	
350 mm	1,000 mm	
600 mm	1,300 mm	
please see ⓘ	please see ⓘ	
400 kHz	200 kHz	
0.1 mm	0.1 mm	
± 0.15 %	± 0.15 %	
± 1 % (temperature drift internally compensated)	± 1 % (temperature drift internally compensated)	
10 to 30 V DC, reverse polarity protection	10 to 30 V DC, reverse polarity protection	
≤ 60 mA	≤ 60 mA	
brass sleeve, nickel-plated: PBT, PA;	brass sleeve, nickel-plated: PBT, PA;	
ultrasonic transducer: polyurethane foam,	ultrasonic transducer: polyurethane foam,	
epoxy resin with glass content	epoxy resin with glass content	
5-pin M12 initiator plug	5-pin M12 initiator plug	
com input	com input	
• Teach-in via com input on pin 5	• Teach-in via com input on pin 5	
• LCA-2 with LinkControl	• LCA-2 with LinkControl	
• IO-Link	• IO-Link	
LED green: working, LED yellow: switch status	LED green: working, LED yellow: switch status	
V 1.1	V 1.1	
yes	yes	
16 ms	20 ms	
yes	yes	
-25°C to +70°C	-25°C to +70°C	
-40°C to +85°C	-40°C to +85°C	
35 g	35 g	
5 mm	20 mm	
12 Hz	10 Hz	
64 ms	80 ms	
< 300 ms	< 300 ms	
Ipc+35/CFI	**Ipc+100/CFI**	
Push-Pull, U_B-1 V, -U_B+1 V, I_{max} = 100 mA	Push-Pull, U_B-1 V, -U_B+1 V, I_{max} = 100 mA	
current output 4–20 mA, switchable rising/falling	current output 4–20 mA, switchable rising/falling	

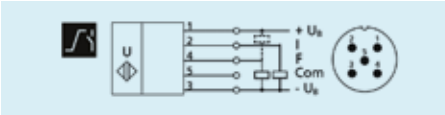

1 Push-Pull switching output + analogue output 4–20 mA

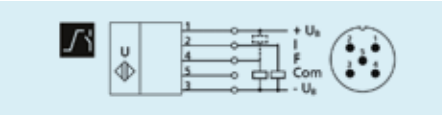

1 Push-Pull switching output + analogue output 4–20 mA

Ipc+35/CFU	**Ipc+100/CFU**	
Push-Pull, U_B-1 V, -U_B+1 V, I_{max} = 100 mA	Push-Pull, U_B-1 V, -U_B+1 V, I_{max} = 100 mA	
voltage output 0–10 V (at $U_B \geq 15$ V)	voltage output 0–10 V (at $U_B \geq 15$ V)	
short-circuit-proof, switchable rising/falling	short-circuit-proof, switchable rising/falling	

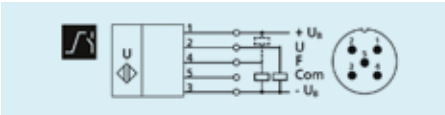

1 Push-Pull switching output + analogue output 0–10 V

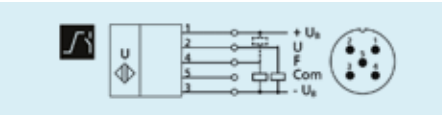

1 Push-Pull switching output + analogue output 0–10 V

	Ipc+15	Ipc+25
	0.15 m	0.25 m
measuring range	**20 – 250 mm**	**30 – 350 mm**

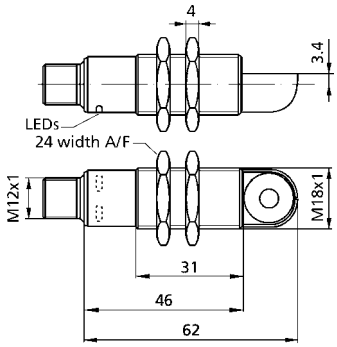

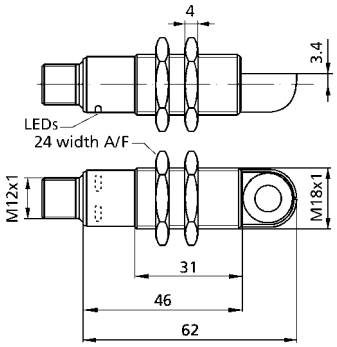

blind zone	20 mm	30 mm
operating range	150 mm	250 mm
maximum range	250 mm	350 mm
angle of beam spread	please see ⓘ	please see ⓘ
transducer frequency	380 kHz	320 kHz
resolution/sampling rate	0.1 mm	0.1 mm
reproducibility	± 0.15 %	± 0.15 %
accuracy	± 1 % (temperature drift internally compensated)	± 1 % (temperature drift internally compensated)
operating voltage U_B	10 to 30 V DC, reverse polarity protection	10 to 30 V DC, reverse polarity protection
no-load current consumption	≤ 60 mA	≤ 60 mA
housing	brass sleeve, nickel-plated: PBT, PA; ultrasonic transducer: polyurethane foam, epoxy resin with glass content	brass sleeve, nickel-plated: PBT, PA; ultrasonic transducer: polyurethane foam, epoxy resin with glass content
type of connection	5-pin M12 initiator plug	5-pin M12 initiator plug
controls	com input	com input
scope for settings	• Teach-in via com input on pin 5 • LCA-2 with LinkControl • IO-Link	• Teach-in via com input on pin 5 • LCA-2 with LinkControl • IO-Link
indicators	LED green: working, LED yellow: switch status	LED green: working, LED yellow: switch status
IO-Link	V 1.1	V 1.1
IO-Link SIO mode support	yes	yes
IO-Link min. cycle time	8 ms	8 ms
Smart Sensor Profile	yes	yes
operating temperature	-25°C to +70°C	-25°C to +70°C
storage temperature	-40°C to +85°C	-40°C to +85°C
weight	40 g	40 g
switching hysteresis[1]	2 mm	3 mm
switching frequency[1]	25 Hz	25 Hz
response time	32 ms	32 ms
delay prior to availability	< 300 ms	< 300 ms
order number	**Ipc+15/WK/CFI**	**Ipc+25/WK/CFI**
switching output	Push-Pull, U_B-1 V, -U_B+1 V, I_{max} = 100 mA	Push-Pull, U_B-1 V, -U_B+1 V, I_{max} = 100 mA
analogue output	current output 4–20 mA, switchable rising/falling	current output 4–20 mA, switchable rising/falling

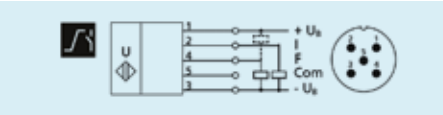

1 Push-Pull switching output + analogue output 4–20 mA

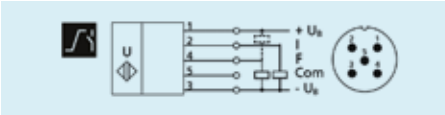

1 Push-Pull switching output + analogue output 4–20 mA

order number	**Ipc+15/WK/CFI**	**Ipc+25/WK/CFI**
switching output	Push-Pull, U_B-1 V, -U_B+1 V, I_{max} = 100 mA	Push-Pull, U_B-1 V, -U_B+1 V, I_{max} = 100 mA
analogue output	voltage output 0–10 V (at U_B ≥ 15 V) short-circuit-proof, switchable rising/falling	voltage output 0–10 V (at U_B ≥ 15 V) short-circuit-proof, switchable rising/falling

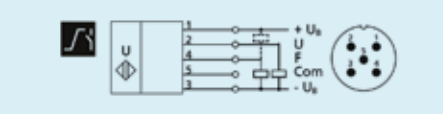

1 Push-Pull switching output + analogue output 0–10 V

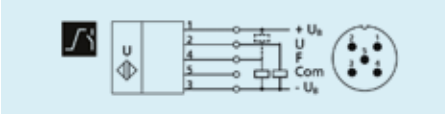

1 Push-Pull switching output + analogue output 0–10 V

[1] Can be programmed with LinkControl and IO-Link.

Ipc+35	Ipc+100
0.35 m	1.0 m
65–600 mm	**120–1,300 mm**

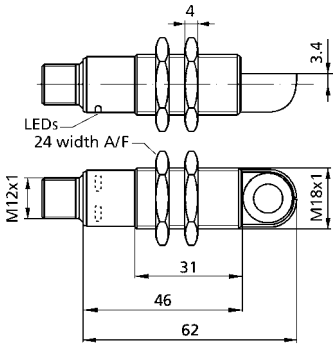

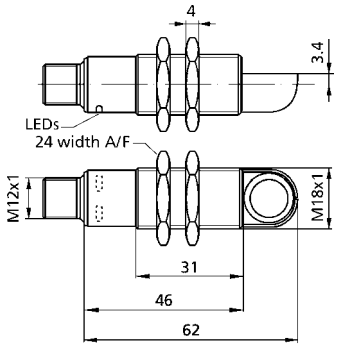

65 mm	120 mm
350 mm	1,000 mm
600 mm	1,300 mm
please see ⓘ	please see ⓘ
400 kHz	200 kHz
0.1 mm	0.1 mm
± 0.15 %	± 0.15 %
± 1 % (temperature drift internally compensated)	± 1 % (temperature drift internally compensated)
10 to 30 V DC, reverse polarity protection	10 to 30 V DC, reverse polarity protection
≤ 60 mA	≤ 60 mA
brass sleeve, nickel-plated: PBT, PA;	brass sleeve, nickel-plated: PBT, PA;
ultrasonic transducer: polyurethane foam,	ultrasonic transducer: polyurethane foam,
epoxy resin with glass content	epoxy resin with glass content
5-pin M12 initiator plug	5-pin M12 initiator plug
com input	com input
• Teach-in via com input on pin 5	• Teach-in via com input on pin 5
• LCA-2 with LinkControl	• LCA-2 with LinkControl
• IO-Link	• IO-Link
LED green: working, LED yellow: switch status	LED green: working, LED yellow: switch status
V 1.1	V 1.1
yes	yes
16 ms	20 ms
yes	yes
-25°C to +70°C	-25°C to +70°C
-40°C to +85°C	-40°C to +85°C
40 g	40 g
5 mm	20 mm
12 Hz	10 Hz
64 ms	80 ms
< 300 ms	< 300 ms
Ipc+35/WK/CFI	**Ipc+100/WK/CFI**
Push-Pull, U_B-1 V, -U_B+1 V, I_{max} = 100 mA	Push-Pull, U_B-1 V, -U_B+1 V, I_{max} = 100 mA
current output 4–20 mA, switchable rising/falling	current output 4–20 mA, switchable rising/falling

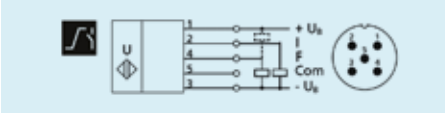

1 Push-Pull switching output + analogue output 4–20 mA

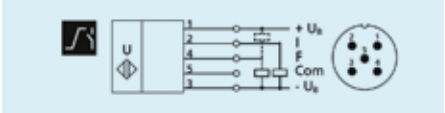

1 Push-Pull switching output + analogue output 4–20 mA

Ipc+35/WK/CFI	**Ipc+100/WK/CFI**
Push-Pull, U_B-1 V, -U_B+1 V, I_{max} = 100 mA	Push-Pull, U_B-1 V, -U_B+1 V, I_{max} = 100 mA
voltage output 0–10 V (at $U_B \geq 15$ V)	voltage output 0–10 V (at $U_B \geq 15$ V)
short-circuit-proof, switchable rising/falling	short-circuit-proof, switchable rising/falling

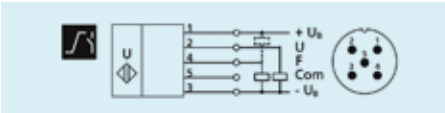

1 Push-Pull switching output + analogue output 0–10 V

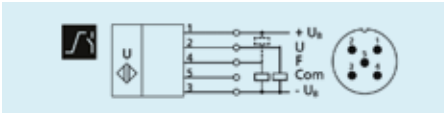

1 Push-Pull switching output + analogue output 0–10 V

nero

Ultrasonic proximity switch nero in M18 plastic sleeve with 4 detection ranges.

HIGHLIGHTS

› Variant with 90° angled head

BASICS

› 1 switching output, pnp or npn basis

› 4 detection ranges with a measurement range of 20 mm to 1.3 m

› microsonic Teach-in on pin 2

› 0.2 mm resolution

› 10–30 V operating voltage

nero ultrasonic proximity switches

are available in a M18 plastic sleeve. In addition to the axial beam direction variant, there is also a housing variant with a 90° angled head and radial beam direction. The ultrasonic proximity switches detect objects contactless and reliable a vailable in four detection ranges from 20 mm to 1.3 m.

For the nero sensor family

there are 1 output stage and 4 detection ranges available:

- 1 switching output with pnp or npn switching technology

Sensors with switching output have three operating modes:

- Single switching point
- Two-way reflective barrier
- Window mode

Teach-in of a single switching point

- Place object to be detected at the desired distance 1
- Apply $+U_B$ to pin 2 for about 3 seconds
- Then apply $+U_B$ to pin 2 again for about 1 second

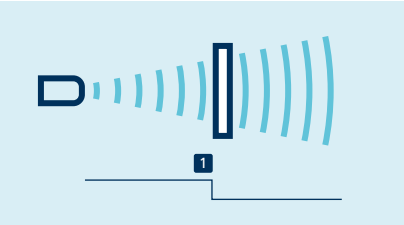

Teach-in of a switching point

Teach-in of a two-way reflective barrier

with a fixed reflector

- Apply $+U_B$ to pin 2 for about 3 seconds
- Then apply $+U_B$ to pin 2 again for about 10 seconds

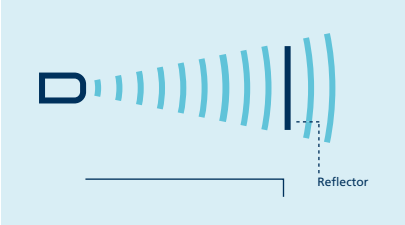

Teach-in of a two-way reflective barrier

For configuration of a window

- Place object at the near edge of the window 1
- Apply $+U_B$ to pin 2 for about 3 seconds
- Then move the object to the far edge of the window 2
- Then apply $+U_B$ to pin 2 again for about 1 second

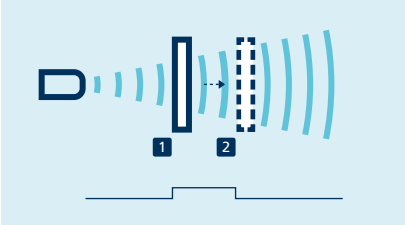

Teach-in of a window with two switching points

NCC/NOC

can also be set via pin 2.

One green and one yellow LED

indicate the state of the output and support microsonic Teach-in.

	nero-15	nero-25
	0.15 m	0.25 m
measuring range	**20 – 250 mm**	**30 – 350 mm**

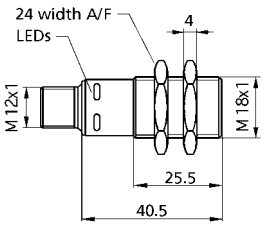

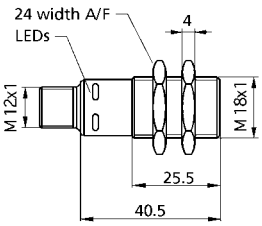

blind zone	20 mm	30 mm
operating range	150 mm	250 mm
maximum range	250 mm	350 mm
angle of beam spread	please see ⓘ	please see ⓘ
transducer frequency	380 kHz	320 kHz
resolution/sampling rate	0.20 mm	0.20 m
reproducibility	± 0.15 %	± 0.15 %
accuracy	temperature drift 0.17 %/K	temperature drift 0.17 %/K
operating voltage U_B	10 to 30 V DC, reverse polarity protection	10 V to 30 V DC, reverse polarity protection
no-load current consumption	≤ 40 mA	≤ 40 mA
housing	PBT; ultrasonic transducer: polyurethane foam, epoxy resin with glass content	PBT; ultrasonic transducer: polyurethane foam, epoxy resin with glass content
class of protection according to EN 60529	IP 67	IP 67
type of connection	4-pin M12 initiator plug	4-pin M12 initiator plug
controls	Teach-in via pin 2	Teach-in via pin 2
scope for settings	Teach-in	Teach-in
indicators	LED green: working, LED yellow: switch status	LED green: working, LED yellow: switch status
operating temperature	-25°C to +70°C	-25°C to +70°C
storage temperature	-40°C to +85°C	-40°C to +85°C
weight	15 g	15 g
switching hysteresis	2 mm	3 mm
switching frequency	25 Hz	25 Hz
response time	32 ms	32 ms
delay prior to availability	< 300 ms	< 300 ms
order number	**nero-15/CD**	**nero-25/CD**
switching output	pnp, U_B-2 V, I_{max} = 200 mA	pnp, U_B-2 V, I_{max} = 200 mA
	NOC/NCC adjstable, short-circuit-proof	NOC/NCC adjstable, short-circuit-proof

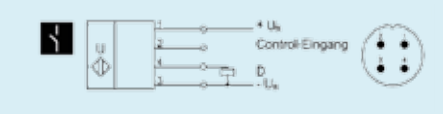

1 pnp switching output

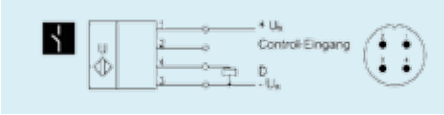

1 pnp switching output

order number	**nero-15/CE**	**nero-25/CE**
switching output	npn, U_B+2 V, I_{max} = 200 mA	npn, U_B+2 V, I_{max} = 200 mA
	NOC/NCC adjstable, short-circuit-proof	NOC/NCC adjstable, short-circuit-proof

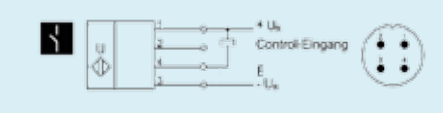

1 npn switching output

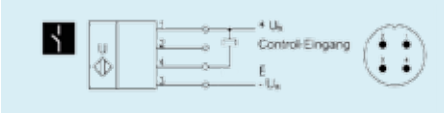

1 npn switching output

nero-35	nero-100	
0.35 m	1.0 m	
65 – 600 mm	**120 – 1,300 mm**	

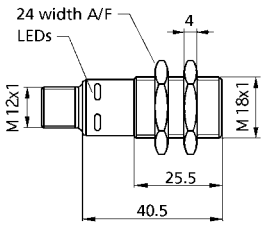

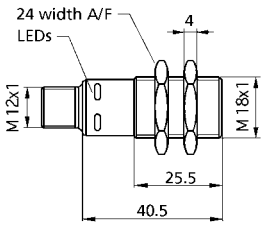

65 mm	120 mm	
350 mm	1,000 mm	
600 mm	1,300 mm	
please see ⓘ	please see ⓘ	
400 kHz	200 kHz	
0.20 m	0.20 m	
± 0.15 %	± 0.15 %	
temperature drift 0.17 %/K	temperature drift 0.17 %/K	
10 V to 30 V DC, reverse polarity protection	10 V to 30 V DC, reverse polarity protection	
≤ 40 mA	≤ 40 mA	
PBT; ultrasonic transducer: polyurethane foam,	PBT; ultrasonic transducer: polyurethane foam,	
epoxy resin with glass content	epoxy resin with glass content	
IP 67	IP 67	
4-pin M12 initiator plug	4-pin M12 initiator plug	
Teach-in via pin 2	Teach-in via pin 2	
Teach-in	Teach-in	
LED green: working, LED yellow: switch status	LED green: working, LED yellow: switch status	
-25°C to +70°C	-25°C to +70°C	
-40°C to +85°C	-40°C to +85°C	
15 g	15 g	
5 mm	20 mm	
12 Hz	10 Hz	
64 ms	80 ms	
< 300 ms	< 300 ms	
nero-35/CD	**nero-100/CD**	
pnp, U_B-2 V, I_{max} = 200 mA	pnp, U_B-2 V, I_{max} = 200 mA	
NOC/NCC adjstable, short-circuit-proof	NOC/NCC adjstable, short-circuit-proof	

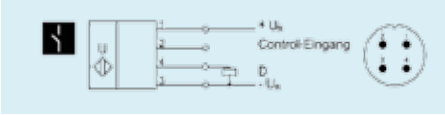

1 pnp switching output

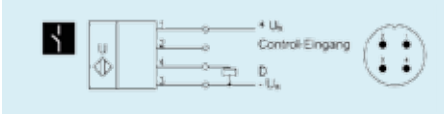

1 pnp switching output

nero-35/CE	**nero-100/CE**	
npn, U_B+2 V, I_{max} = 200 mA	npn, U_B+2 V, I_{max} = 200 mA	
NOC/NCC adjstable, short-circuit-proof	NOC/NCC adjstable, short-circuit-proof	

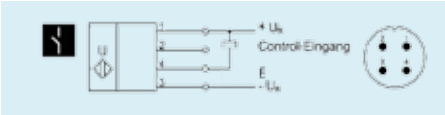

1 npn switching output

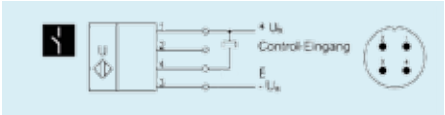

1 npn switching output

	nero-15	nero-25
	0.15 m	0.25 m
measuring range	**20 – 250 mm**	**30 – 350 mm**

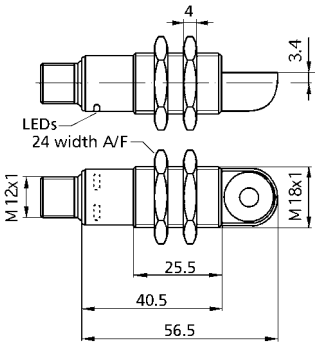

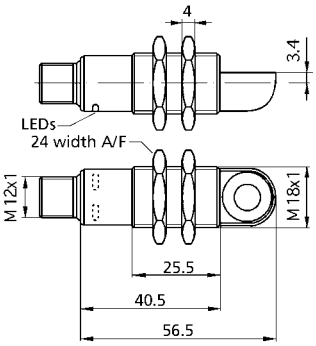

blind zone	20 mm	30 mm
operating range	150 mm	250 mm
maximum range	250 mm	350 mm
angle of beam spread	please see ⓘ	please see ⓘ
transducer frequency	380 kHz	320 kHz
resolution/sampling rate	0.20 mm	0.20 m
reproducibility	± 0.15 %	± 0.15 %
accuracy	temperature drift 0.17 %/K	temperature drift 0.17 %/K
operating voltage U_B	10 to 30 V DC, reverse polarity protection	10 V to 30 V DC, reverse polarity protection
no-load current consumption	≤ 40 mA	≤ 40 mA
housing	PBT; ultrasonic transducer: polyurethane foam, epoxy resin with glass content	PBT; ultrasonic transducer: polyurethane foam, epoxy resin with glass content
class of protection according to EN 60529	IP 67	IP 67
type of connection	4-pin M12 initiator plug	4-pin M12 initiator plug
controls	Teach-in via pin 2	Teach-in via pin 2
scope for settings	Teach-in	Teach-in
indicators	LED green: working, LED yellow: switch status	LED green: working, LED yellow: switch status
operating temperature	-25°C to +70°C	-25°C to +70°C
storage temperature	-40°C to +85°C	-40°C to +85°C
weight	20 g	20 g
switching hysteresis	2 mm	3 mm
switching frequency	25 Hz	25 Hz
response time	32 ms	32 ms
delay prior to availability	< 300 ms	< 300 ms
order number	**nero-15/WK/CD**	**nero-25/WK/CD**
switching output	pnp, U_B-2 V, I_{max} = 200 mA	pnp, U_B-2 V, I_{max} = 200 mA
	NOC/NCC adjstable, short-circuit-proof	NOC/NCC adjstable, short-circuit-proof

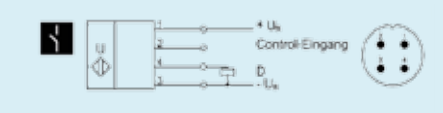

1 pnp switching output

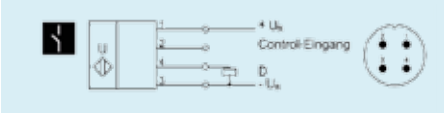

1 pnp switching output

order number	**nero-15/WK/CE**	**nero-25/WK/CE**
switching output	npn, U_B+2 V, I_{max} = 200 mA	npn, U_B+2 V, I_{max} = 200 mA
	NOC/NCC adjstable, short-circuit-proof	NOC/NCC adjstable, short-circuit-proof

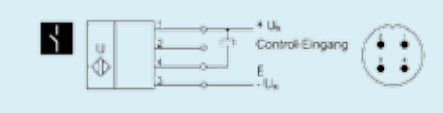

1 npn switching output

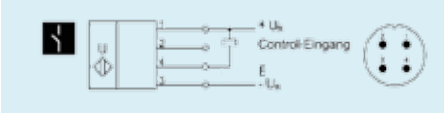

1 npn switching output

nero-35	nero-100	
0.35 m	1.0 m	
65 – 600 mm	**120 – 1,300 mm**	

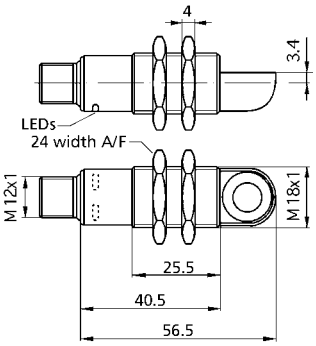

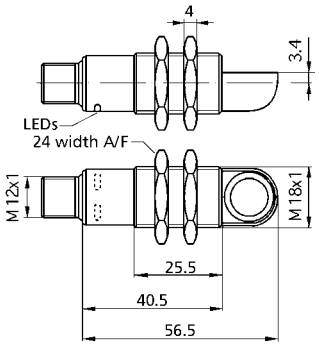

65 mm	120 mm	
350 mm	1,000 mm	
600 mm	1,300 mm	
please see ⓘ	please see ⓘ	
400 kHz	200 kHz	
0.20 m	0.20 m	
± 0.15 %	± 0.15 %	
temperature drift 0.17 %/K	temperature drift 0.17 %/K	
10 V to 30 V DC, reverse polarity protection	10 V to 30 V DC, reverse polarity protection	
≤ 40 mA	≤ 40 mA	
PBT; ultrasonic transducer: polyurethane foam,	PBT; ultrasonic transducer: polyurethane foam,	
epoxy resin with glass content	epoxy resin with glass content	
IP 67	IP 67	
4-pin M12 initiator plug	4-pin M12 initiator plug	
Teach-in via pin 2	Teach-in via pin 2	
Teach-in	Teach-in	
LED green: working, LED yellow: switch status	LED green: working, LED yellow: switch status	
-25°C to +70°C	-25°C to +70°C	
-40°C to +85°C	-40°C to +85°C	
20 g	20 g	
5 mm	20 mm	
12 Hz	10 Hz	
64 ms	80 ms	
< 300 ms	< 300 ms	
nero-35/WK/CD	**nero-100/WK/CD**	
pnp, U_B-2 V, I_{max} = 200 mA	pnp, U_B-2 V, I_{max} = 200 mA	
NOC/NCC adjstable, short-circuit-proof	NOC/NCC adjstable, short-circuit-proof	

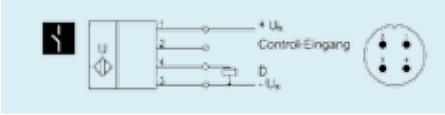

1 pnp switching output

1 pnp switching output

nero-35/WK/CE	**nero-100/WK/CE**	
npn, U_B+2 V, I_{max} = 200 mA	npn, U_B+2 V, I_{max} = 200 mA	
NOC/NCC adjstable, short-circuit-proof	NOC/NCC adjstable, short-circuit-proof	

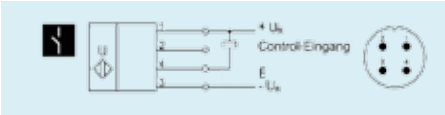

1 npn switching output

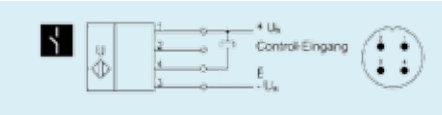

1 npn switching output

nano

With a total length of only 55 mm, it is the shortest M12 ultrasonic sensor on the market.

HIGHLIGHTS

- Ultrasonic sensor in the M12 threaded sleeve
- The total length including plug is only 55 mm
- Improved temperature compensation › adjustment to working conditions within 45 seconds

BASICS

- 1 switching output in pnp or npn variant
- Analogue output 4–20 mA or 0–10 V
- 2 detection ranges with a measurement range of 20 mm to 350 mm
- microsonic Teach-in on pin 2
- 0.069 mm resolution
- Operating voltage 10–30 V › for use with various voltage networks

With a housing length of only 55 mm

nano sensors with switching outputs are the smallest ultrasonic sensors inside the M12 threaded sleeve on the market. Analogue sensors are 60 mm long. nano sensors have a 4-pole M12 circular plug and are taught via pin 2.

For the nano-sensor family

there are four output stages and two detection ranges available:

- 1 switching output in either pnp or npn switching technology
- 1 analogue output 4–20 mA or 0–10 V

Sensors with switching output have three operating modes:

- Single switching point
- Two-way reflective barrier
- Window mode

The temperature compensation

of the nano sensors profits from a significant improvement. The sensors reach their operating point only 45 seconds after activation of the operating voltage. We now compensate for the influence of self-heating and installation conditions. This brings improved precision shortly after activation of the supply voltage and in running operation.

Teach-in of a single switching point

- Place object to be detected at the desired distance 1.
- Apply $+U_B$ to pin 2 for about 3 seconds.
- Then apply $+U_B$ to pin 2 again for about 1 second.

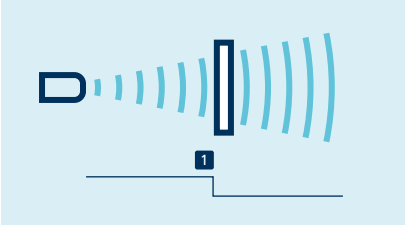

Teach-in of a switching point

Teach-in of a two-way reflective barrier

with a fixed mounted reflector

- Apply $+U_B$ to pin 2 for about 3 seconds.
- Then apply $+U_B$ to pin 2 again for about 10 seconds.

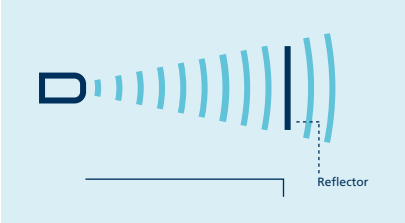

Teach-in of a two-way reflective barrier

To set a window with two switching points

- Place object to the sensor-close window limit 1.
- Apply $+U_B$ to pin 2 for about 3 seconds until both LEDs flash.
- Then move the object to the sensor-distant window limit 2.
- Then apply $+U_B$ to pin 2 again for about 1 second until LED 2 extinguishes.

For setting the analogue output

- Initially position the object to be detected to the sensor-close window limit 1.
- Apply $+U_B$ to pin 2 for about 3 seconds until both LEDs flash.
- Then move the object to the sensor-distant window limit 2.
- Then apply $+U_B$ to pin 2 again for about 1 second.

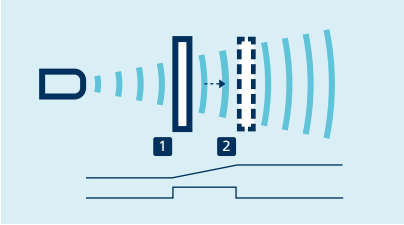

Teach-in of an analogue characteristics or a window with two switching points

NCC/NOC

and rising/falling analogue characteristics can also be set via pin 2.

One green and one yellow LED

indicate the state of the output and support microsonic Teach-in.

	nano-15	nano-24
	0.15 m	0.24 m
measuring range	**20–250 mm**	**40–350 mm**

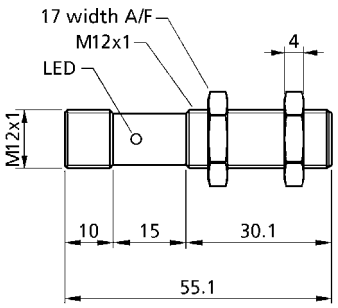

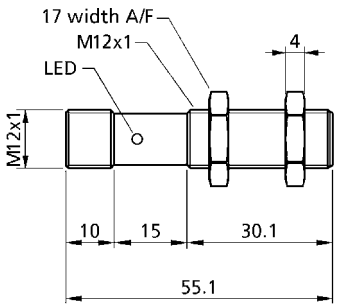

blind zone	20 mm	40 mm
operating range	150 mm	240 mm
maximum range	250 mm	350 mm
angle of beam spread	please see ⓘ	please see ⓘ
transducer frequency	380 kHz	500 kHz
resolution/sampling rate	0.069 mm	0.069 mm
reproducibility	± 0.15 %	± 0.15 %
accuracy	± 1 % (temperature drift internally compensated)	± 1 % (temperature drift internally compensated)
operating voltage U_B	10 V to 30 V DC, reverse polarity protection	10 V to 30 V DC, reverse polarity protection
no-load current consumption	< 25 mA	< 35 mA
housing	brass sleeve, nickel-plated, plastic parts: PBT; ultrasonic transducer: polyurethane foam, epoxy resin with glass content	brass sleeve, nickel-plated, plastic parts: PBT; ultrasonic transducer: polyurethane foam, epoxy resin with glass content
class of protection according to EN 60529	IP 67	IP 67
type of connection	4-pin M12 initiator plug	4-pin M12 initiator plug
scope for settings	Teach-in on pin 2	Teach-in on pin 2
controls	Teach-in	Teach-in
indicators	LED green: working; LED yellow: switch status	LED green: working; LED yellow: switch status
operating temperature	-25°C to +70°C	-25°C to +70°C
storage temperature	-40°C to +85°C	-40°C to +85°C
weight	15 g	15 g
switching hysteresis	2 mm	3 mm
switching frequency	25 Hz	20 Hz
response time	24 ms	30 ms
delay prior to availability	< 300 ms	< 300 ms
order number	**nano-15/CD**	**nano-24/CD**
switching output	pnp, U_B-2 V, I_{max} = 200 mA NOC/NCC adjustable, short-circuit-proof	pnp, U_B-2 V, I_{max} = 200 mA NOC/NCC adjustable, short-circuit-proof

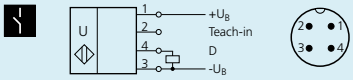

1 pnp switching output

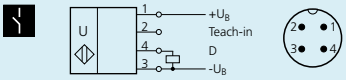

1 pnp switching output

order number	**nano-15/CE**	**nano-24/CE**
switching output	npn, -U_B+2 V, I_{max} = 200 mA NOC/NCC adjustable, short-circuit-proof	npn, -U_B+2 V, I_{max} = 200 mA NOC/NCC adjustable, short-circuit-proof

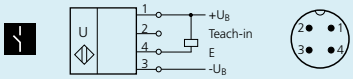

1 npn switching output

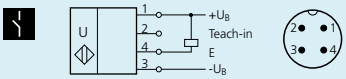

1 npn switching output

	nano-15	nano-24
	0.15 m	0.24 m
measuring range	**20–250 mm**	**40–350 mm**

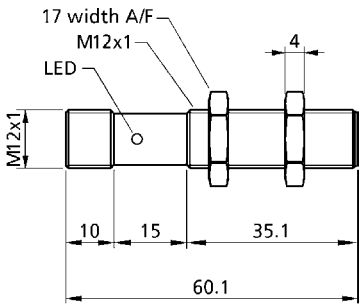

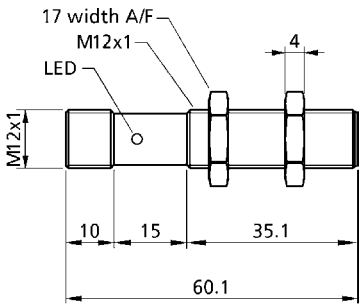

blind zone	20 mm	40 mm
operating range	150 mm	240 mm
maximum range	250 mm	350 mm
angle of beam spread	please see ⓘ	please see ⓘ
transducer frequency	380 kHz	500 kHz
resolution/sampling rate	0.069 mm	0.069 mm
reproducibility	± 0.15 %	± 0.15 %
accuracy	± 1 % (temperature drift internally compensated)	± 1 % (temperature drift internally compensated)
operating voltage U_B	10 V to 30 V DC, reverse polarity protection	10 V to 30 V DC, reverse polarity protection
no-load current consumption	< 30 mA	< 40 mA
housing	brass sleeve, nickel-plated, plastic parts: PBT; ultrasonic transducer: polyurethane foam, epoxy resin with glass content	brass sleeve, nickel-plated, plastic parts: PBT; ultrasonic transducer: polyurethane foam, epoxy resin with glass content
class of protection according to EN 60529	IP 67	IP 67
type of connection	4-pin M12 initiator plug	4-pin M12 initiator plug
scope for settings	Teach-in on pin 2	Teach-in on pin 2
controls	Teach-in	Teach-in
indicators	LED green: working; LED yellow: switch status	LED green: working; LED yellow: switch status
operating temperature	-25°C to +70°C	-25°C to +70°C
storage temperature	-40°C to +85°C	-40°C to +85°C
weight	15 g	15 g
response time	24 ms	30 ms
delay prior to availability	< 300 ms	< 300 ms
order number	**nano-15/CI**	**nano-24/CI**
analogue output	current output 4–20 mA switchable rising/falling	current output 4–20 mA switchable rising/falling

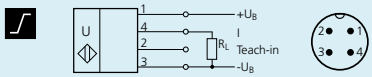

analogue output 4–20 mA

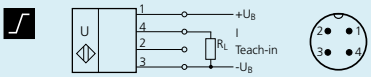

analogue output 4–20 mA

order number	**nano-15/CU**	**nano-24/CU**
analogue output	voltage output 0–10 V (at $U_B \geq 15$ V) short-circuit-proof switchable rising/falling	voltage output 0–10 V (at $U_B \geq 15$ V) short-circuit-proof switchable rising/falling

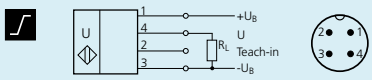

analogue output 0–10 V

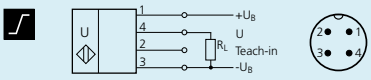

analogue output 0–10 V

Ics+

The Ics+ ultrasonic sensors in a compact square housing – with analogue/switching outputs and IO-Link.

HIGHLIGHTS

- Very compact housing with a base area of only 62.2 mm x 62.2 mm
- IO-Link interface › for support of the new industry standard
- Synchronisation and multiplex mode › for simultaneous operation of up to ten sensors in close quarters
- 8 m maximum detection range
- UL Listed to Canadian and US safety standards

BASICS

- 1 Push-Pull switching output, or 2 pnp switching outputs
- Analogue output 4–20 mA and 0–10 V › with automatic switching between current and voltage outputs
- microsonic Teach-in by using button T1 and T2
- 0.18 mm to 2.4 mm resolution
- Temperature compensation
- 9–30 V operating voltage
- LinkControl › for configuration of sensors from a PC

IO-Link integrated

Also see the chapter "Function and advantages"

The Ics+ ultrasonic sensors

have block-like plastic housing (PBT) with a base area of only 62.2 x 62.2 mm and four fastening bores.

The sensors are Listed to applicable UL Standards and requirements by UL for Canada and the US.

Two dual colour LEDs

show all operating statuses.

Three output stages for selection:

- 1 Push-Pull switching output with an IO-Link
- 2 pnp switching outputs
- 1 analogue output 4–20 mA and 0–10 V

Using the two buttons T1 and T2

the Ics+ sensors can be easily set.

The Ics+ sensors with switching outputs have three operating modes:

- Single switching point
- Two-way reflective barrier
- Window mode

Teach-in of a single switching point

- Place object 1 to be detected at the desired distance.
- Push button T1 for approx. 3 seconds.
- Then push button T1 again for approx. 1 second.

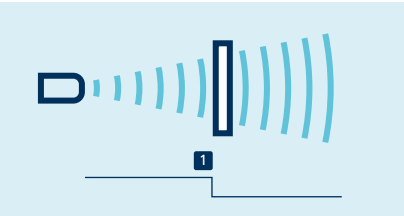

Teach-in of switching point

Teach-in of a two-way reflective barrier

with a fixed mounted reflector

- Push button T1 for approx. 3 seconds.
- Then push button T1 again for approx. 10 seconds.

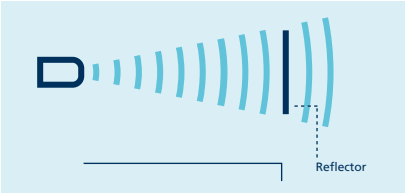

Teach-in of a two-way reflective barrier

For setting the analogue output

- initially position the object to be acquired to the sensor-close window limit 1.
- Push button T1 for 3 seconds.
- Then move the object to the sensor-distant window limit 2.
- Then push button T1 again for approx. 1 second.

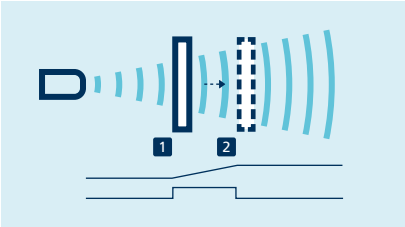

Teach-in of an analogue characteristics or a window with two switching points

For configuration of a window

with two switching points on a single switched output, the procedure is the same as setting the analogue.

Analogue sensors

check the connected working resistance at the output and automatically switch to 4–20 mA current output or 0–10 V voltage output.

NCC/NOC

and rising/falling analogue characteristics can also be set via the buttons.

LinkControl

permits comprehensive parameterisation of the Ics+ ultrasonic sensors via the LinkControl adapter LCA-2 which connects the sensors to the PC.

Sensor connected to the PC via LCA-2 for programming

Easy to synchronise

If several Ics+ ultrasonic sensors are operated in one application, they can be synchronised via pin 5 to prevent interference.

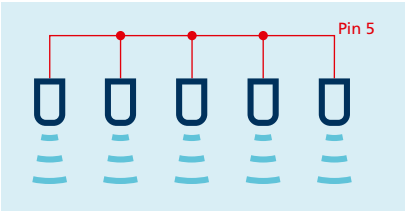

Synchronisation via pin 5

If more than ten sensors need to be synchronised, this can be carried out with the SyncBox1 (see the chapter "Accessories"). Synchronisation via pin 5 is also possible in IO-Link mode.

IO-Link

Ultrasonic sensors Ics+340/F and Ics+600/F have a Push-Pull switching output and support IO-Link in version 1.0 (see "Function and advantages: IO-Link in detail").

	lcs+340	lcs+600
	3.4 m	6.0 m
measuring range	**350 – 5,000 mm**	**600 – 8,000 mm**

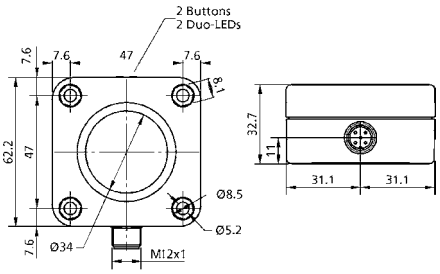

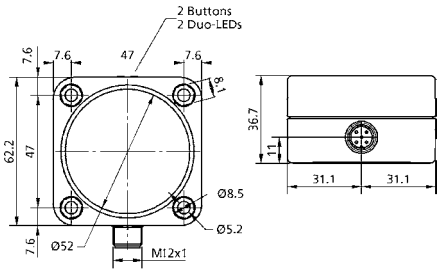

blind zone	350 mm	600 mm
operating range	3,400 mm	6,000 mm
maximum range	5,000 mm	8,000 mm
angle of beam spread	please see ⓘ	please see ⓘ
transducer frequency	120 kHz	80 kHz
resolution/sampling rate	0.18 mm	0.18 mm
reproducibility	± 0.15 %	± 0.15 %
accuracy	± 1 % (temperature drift internally compensated)	± 1 % (temperature drift internally compensated)
operating voltage U_B	9 V to 30 V DC, reverse polarity protection	9 V to 30 V DC, reverse polarity protection
no-load current consumption	≤ 60 mA	≤ 60 mA
housing	PBT; ultrasonic transducer: polyurethane foam,	PBT; ultrasonic transducer: polyurethane foam,
	epoxy resin with glass content	epoxy resin with glass content
class of protection according to EN 60529	IP 67	IP 67
type of connection	5-pin M12 initiator plug	5-pin M12 initiator plug
controls	2 push-buttons	2 push-buttons
scope for settings	• Teach-in via push-button	• Teach-in via push-button
	• LCA-2 with LinkControl	• LCA-2 with LinkControl
	• IO-Link	• IO-Link
indicators	2 three-colour LEDs	2 three-colour LEDs
IO-Link	V 1.0	V 1.0
IO-Link SIO mode support	yes	yes
IO-Link min. cycle time	43.2 ms	60.8 ms
Smart Sensor Profile	-	-
operating temperature	-25°C to +70°C	-25°C to +70°C
storage temperature	-40°C to +85°C	-40°C to +85°C
weight	180 g	240 g
switching hysteresis[1)]	50 mm	100 mm
switching frequency[1)]	4 Hz	3 Hz
response time[1)]	172 ms	240 ms
delay prior to availability	< 380 ms	< 450 ms
order number	**lcs+340/F**	**lcs+600/F**
switching output	Push-Pull, U_B-3 V, -U_B+3 V, I_{max} = 100 mA	Push-Pull, U_B-3 V, -U_B+3 V, I_{max} = 100 mA

Enclosure Type 1
For use only in industrial machinery NFPA 79 applications.

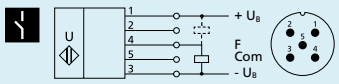

1 Push-Pull switching output

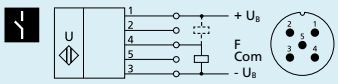

1 Push-Pull switching output

[1)] Can be programmed with LinkControl.

	lcs+340	lcs+600
	3.4 m	6.0 m
measuring range	**350 – 5,000 mm**	**600 – 8,000 mm**

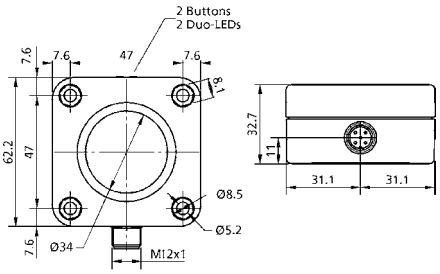

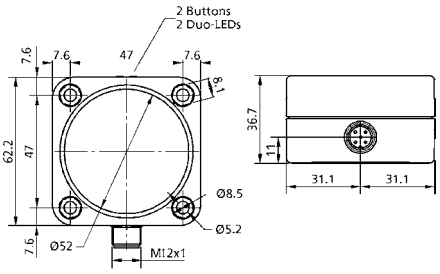

	lcs+340	lcs+600
blind zone	350 mm	600 mm
operating range	3,400 mm	6,000 mm
maximum range	5,000 mm	8,000 mm
angle of beam spread	please see ⓘ	please see ⓘ
transducer frequency	120 kHz	80 kHz
resolution/sampling rate	0.18 mm	0.18 mm
reproducibility	± 0.15 %	± 0.15 %
accuracy	± 1 % (temperature drift internally compensated)	± 1 % (temperature drift internally compensated)
operating voltage U_B	9 V to 30 V DC, reverse polarity protection	9 V to 30 V DC, reverse polarity protection
no-load current consumption	≤ 60 mA	≤ 60 mA
housing	PBT; ultrasonic transducer: polyurethane foam,	PBT; ultrasonic transducer: polyurethane foam,
	epoxy resin with glass content	epoxy resin with glass content
class of protection according to EN 60529	IP 67	IP 67
type of connection	5-pin M12 initiator plug	5-pin M12 initiator plug
controls	2 push-buttons	2 push-buttons
scope for settings	• Teach-in via push-button	• Teach-in via push-button
	• LCA-2 with LinkControl	• LCA-2 with LinkControl
indicators	2 three-colour LEDs	2 three-colour LEDs
operating temperature	-25°C to +70°C	-25°C to +70°C
storage temperature	-40°C to +85°C	-40°C to +85°C
weight	180 g	240 g
switching hysteresis[1)]	50 mm	100 mm
switching frequency[1)]	4 Hz	3 Hz
response time[1)]	172 ms	240 ms
delay prior to availability	< 380 ms	< 450 ms
order number	**lcs+340/DD**	**lcs+600/DD**
switching outputs	2 x pnp, U_B-2 V, I_{max} = 2 x 200 mA	2 x pnp, U_B-2 V, I_{max} = 2 x 200 mA
	NOC/NCC adjustable, short-circuit-proof	NOC/NCC adjustable, short-circuit-proof

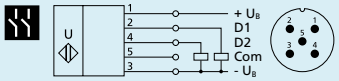

2 pnp switching outputs

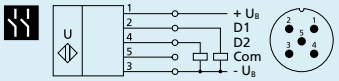

2 pnp switching outputs

Enclosure Type 1
For use only in industrial machinery NFPA 79 applications.

	lcs+340	lcs+600
	3.4 m	6.0 m
measuring range	**350 – 5,000 mm**	**600 – 8,000 mm**

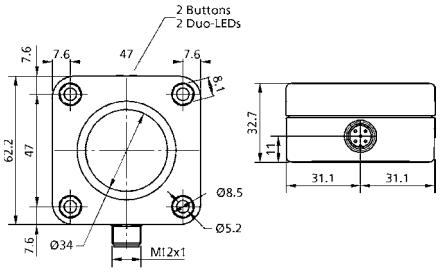

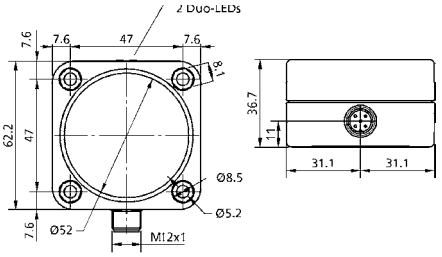

	lcs+340	lcs+600
blind zone	350 mm	600 mm
operating range	3,400 mm	6,000 mm
maximum range	5,000 mm	8,000 mm
angle of beam spread	please see ⓘ	please see ⓘ
transducer frequency	120 kHz	80 kHz
resolution/sampling rate	0.18 mm to 1.5 mm, depending	0.18 mm to 2.4 mm, depending
	on the analogue window	on the analogue window
reproducibility	± 0.15 %	± 0.15 %
accuracy	± 1 % (temperature drift internally compensated)	± 1 % (temperature drift internally compensated)
operating voltage U_B	9 V to 30 V DC, reverse polarity protection	9 V to 30 V DC, reverse polarity protection
no-load current consumption	≤ 60 mA	≤ 60 mA
housing	PBT; ultrasonic transducer: polyurethane foam,	PBT; ultrasonic transducer: polyurethane foam,
	epoxy resin with glass content	epoxy resin with glass content
class of protection according to EN 60529	IP 67	IP 67
type of connection	5-pin M12 initiator plug	5-pin M12 initiator plug
controls	2 push-buttons	2 push-buttons
scope for settings	• Teach-in via push-button	• Teach-in via push-button
	• LCA-2 with LinkControl	• LCA-2 with LinkControl
indicators	2 three-colour LEDs	2 three-colour LEDs
operating temperature	-25°C to +70°C	-25°C to +70°C
storage temperature	-40°C to +85°C	-40°C to +85°C
weight	180 g	240 g
response time[1]	172 ms	240 ms
delay prior to availability	< 450 ms	< 450 ms
order number	**lcs+340/IU**	**lcs+600/IU**
analogue output	current output 4 – 20 mA	current output 4 – 20 mA
	voltage output 0 – 10 V	voltage output 0 – 10 V
	short-circuit-proof, switchable rising/falling	short-circuit-proof, switchable rising/falling

Enclosure Type 1
For use only in industrial machinery NFPA 79 applications.

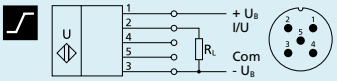

analogue output

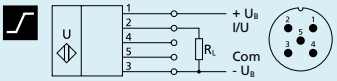

analogue output

[1] Can be programmed with LinkControl.

lcs

Ultrasonic sensors in the lcs series in cuboidal housing with lateral sound exit are available in three device variants with three different detection ranges.

HIGHLIGHTS

- Up to 3 pnp switching outputs
- Automatic synchronisation › for simultaneous operation of up to ten sensors in close quarters

BASICS

- 2 or 3 switching outputs in pnp variant
- Analogue output 4–20 mA and 0–10 V › with automatic switching between current and voltage outputs
- 3 detection ranges with a measurement range of 30 mm to 2 m
- microsonic Teach-in on pin 5
- 0.18 mm resolution
- Temperature compensation
- 9–30 V operating voltage
- LinkControl › for configuration of sensors from a PC

The lcs sensors

are embedded in block-like plastic housing with four fixation bores, two of which are already equipped with M4 threaded bushings for eased mounting.

Two or three LEDs

indicate all operating states.

Three detection ranges and two output stages are available for selection:

- 2 pnp switching outputs
- 3 pnp switching outputs
- 1 analogue output 4–20 mA and 0–10 V

Via pin 5 at the M12 circular connector,

(Com input), the lcs sensors are set (Teach-in).

Switched output D1 is set by connecting pin 5 to $+U_B$ while switched output D2 is set by connecting pin 5 to $-U_B$. Also the sensors with analogue output are set via pin 5.

The lcs sensors with switched output offer three operating modes:

- Single switching point
- Two-way reflective barrier
- Window mode

Teach-in of a single switching point

- Place object to be detected at the desired distance 1.
- Apply $+U_B$ to pin 5 for about 3 seconds.
- Then apply $+U_B$ to pin 5 again for about 1 second.

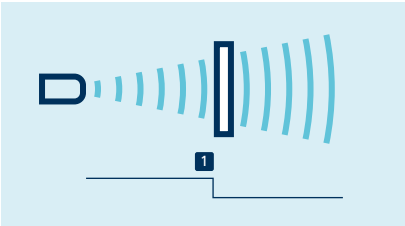

Teach-in of a switching point

Teach-in of a two-way reflective barrier

with a fixed reflector

- Apply $+U_B$ to pin 5 for about 3 seconds.
- Then apply $+U_B$ to pin 5 again for about 10 seconds.

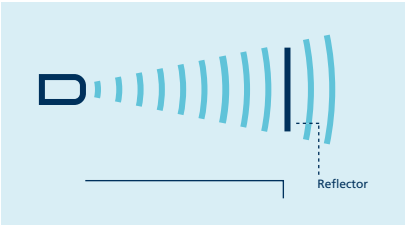

Teach-in of a two-way reflective barrier

For configuration of a window

- Place object at the near edge of the window 1.
- Apply $+U_B$ to pin 5 for about 3 seconds.
- Then move the object to the far edge of the window 2.
- Then apply $+U_B$ to pin 5 again for about 1 second.

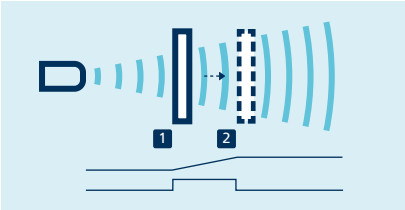

Teach-in of an analogue characteristic or a window with two switching points

NCC/NOC

and rising/falling analogue characteristic curve can also be set via pin 5.

The analogue sensor

checks the load connected to the output and then automatically switch to 4–20 mA output or 0–10 V output to ensure maximum ease of handling.

The lcs-25/DDD is equipped with three pnp switched outputs

which are set with the help of the LinkControl adapter LCA-2 (see the chapter "Accessories").

In addition to this "offline" programming, all lcs sensors can also be parameterised on the PC with the LCA-2 and the LinkControl software.

Sensor connected to the PC via LCA-2 for programming

Synchronisation

permits the simultaneous use of multiple lcs sensors in one application. To avoid mutual interference, the sensors can be synchronised with one another. To do this, all the sensors are electrically connected on pin 5.

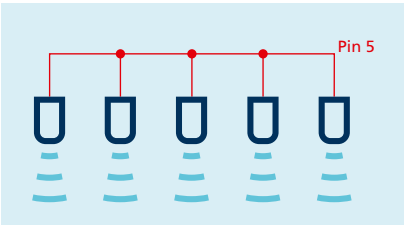

Synchronisation via pin 5

	lcs-25	lcs-35
	0.25 m	0.35 m
measuring range	**30 – 350 mm**	**65 – 600 mm**

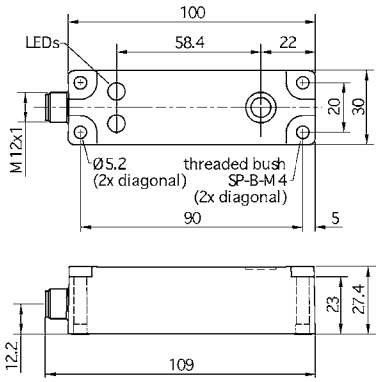

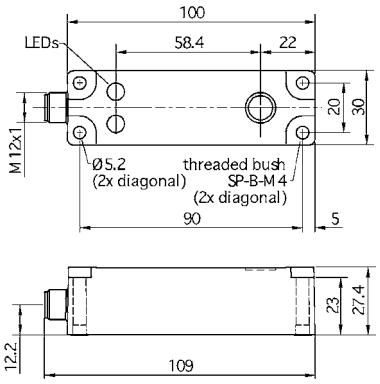

	lcs-25	lcs-35
blind zone	30 mm	65 mm
operating range	250 mm	350 mm
maximum range	350 mm	600 mm
angle of beam spread	please see ⓘ	please see ⓘ
transducer frequency	320 kHz	400 kHz
resolution/sampling rate	0.18 mm	0.18 mm
reproducibility	± 0.15 %	± 0.15 %
accuracy	± 1 % (temperature drift internally compensated)	± 1 % (temperature drift internally compensated)
operating voltage U_B	9 V to 30 V DC, reverse polarity protection	9 V to 30 V DC, reverse polarity protection
no-load current consumption	≤ 70 mA	≤ 70 mA
housing	PBT; ultrasonic transducer: polyurethane foam, epoxy resin with glass content	PBT; ultrasonic transducer: polyurethane foam, epoxy resin with glass content
class of protection according to EN 60529	IP 65	IP 65
type of connection	5-pin M12 initiator plug	5-pin M12 initiator plug
controls	com input (pin 5)	com input (pin 5)
scope for settings	• Teach-in via com input on pin 5 • LCA-2 with LinkControl	• Teach-in via com input on pin 5 • LCA-2 with LinkControl
indicators	2 three-colour LEDs	2 three-colour LEDs
operating temperature	-25°C to +70°C	-25°C to +70°C
storage temperature	-40°C to +85°C	-40°C to +85°C
weight	120 g	120 g
switching hysteresis[1]	3 mm	5 mm
switching frequency[1]	25 Hz	12 Hz
response time[1]	32 ms	64 ms
delay prior to availability	< 300 ms	< 300 ms
order number	**lcs-25/DD/QP**	**lcs-35/DD/QP**
switching outputs	2 x pnp, U_B-2 V, I_{max} = 2 x 200 mA NOC/NCC adjustable, short-circuit-proof	2 x pnp, U_B-2 V, I_{max} = 2 x 200 mA NOC/NCC adjustable, short-circuit-proof

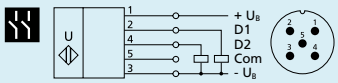

2 pnp switching outputs

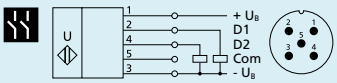

2 pnp switching outputs

[1] Can be programmed with LinkControl.

Ics-130

1.3 m

200 – 2,000 mm

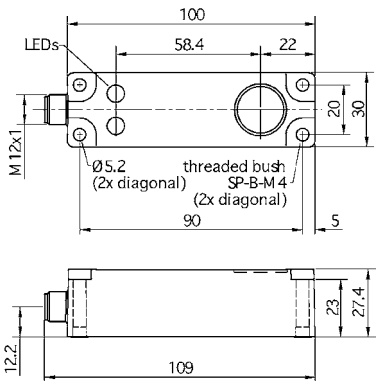

200 mm	
1,300 mm	
2,000 mm	
please see ⓘ	
200 kHz	
0.18 mm	
± 0.15 %	
± 1 % (temperature drift internally compensated)	
9 V to 30 V DC, reverse polarity protection	
≤ 70 mA	
PBT; ultrasonic transducer: polyurethane foam,	
epoxy resin with glass content	
IP 65	
5-pin M12 initiator plug	
com input (pin 5)	
• Teach-in via com input on pin 5	
• LCA-2 with LinkControl	
2 three-colour LEDs	
-25°C to +70°C	
-40°C to +85°C	
120 g	
20 mm	
8 Hz	
92 ms	
< 300 ms	
Ics-130/DD/QP	
2 x pnp, U_B-2 V, I_{max} = 2 x 200 mA	
NOC/NCC adjustable, short-circuit-proof	

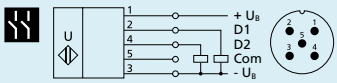

2 pnp switching outputs

	lcs-25	lcs-35
	0.25 m	0.35 m
measuring range	**30 – 350 mm**	**65 – 600 mm**

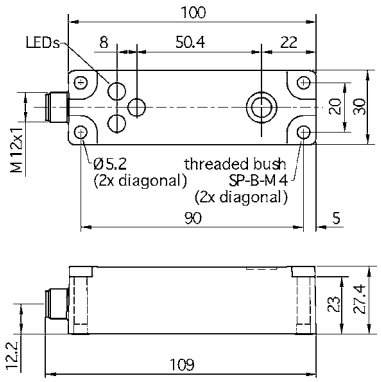

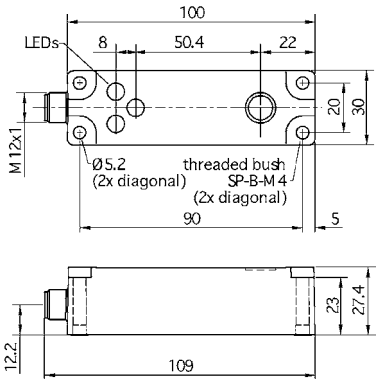

blind zone	30 mm	65 mm
operating range	250 mm	350 mm
maximum range	350 mm	600 mm
angle of beam spread	please see ⓘ	please see ⓘ
transducer frequency	320 kHz	400 kHz
resolution/sampling rate	0.18 mm	0.18 mm
reproducibility	± 0.15 %	± 0.15 %
accuracy	± 1 % (temperature drift internally compensated)	± 1 % (temperature drift internally compensated)
operating voltage U_B	9 V to 30 V DC, reverse polarity protection	9 V to 30 V DC, reverse polarity protection
no-load current consumption	≤ 70 mA	≤ 70 mA
housing	PBT; ultrasonic transducer: polyurethane foam, epoxy resin with glass content	PBT; ultrasonic transducer: polyurethane foam, epoxy resin with glass content
class of protection according to EN 60529	IP 65	IP 65
type of connection	5-pin M12 initiator plug	5-pin M12 initiator plug
scope for settings	LCA-2 with LinkControl	LCA-2 with LinkControl
indicators	3 three-colour LEDs	3 three-colour LEDs
operating temperature	-25°C to +70°C	-25°C to +70°C
storage temperature	-40°C to +85°C	-40°C to +85°C
weight	120 g	120 g
switching hysteresis[1)]	3 mm	5 mm
switching frequency[1)]	25 Hz	12 Hz
response time[1)]	32 ms	64 ms
delay prior to availability	< 300 ms	< 300 ms
order number	**lcs-25/DDD/QP**	**lcs-35/DDD/QP**
switching outputs	3 x pnp, U_B-2 V, I_{max} = 3 x 200 mA	3 x pnp, U_B-2 V, I_{max} = 3 x 200 mA
	NOC/NCC adjustable, short-circuit-proof	NOC/NCC adjustable, short-circuit-proof

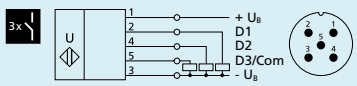

3 pnp switching outputs

3 pnp switching outputs

[1)] Can be programmed with LinkControl.

Ics-130

1.3 m

200 – 2,000 mm

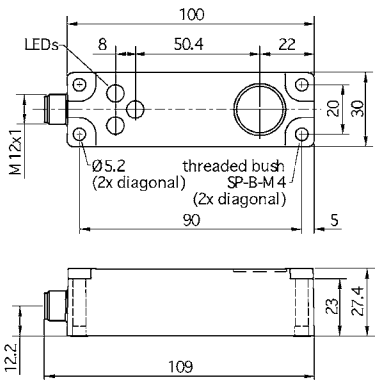

200 mm	
1,300 mm	
2,000 mm	
please see ⓘ	
200 kHz	
0.18 mm	
± 0.15 %	
± 1 % (temperature drift internally compensated)	
9 V to 30 V DC, reverse polarity protection	
≤ 70 mA	
PBT; ultrasonic transducer: polyurethane foam,	
epoxy resin with glass content	
IP 65	
5-pin M12 initiator plug	
LCA-2 with LinkControl	
3 three-colour LEDs	
-25°C to +70°C	
-40°C to +85°C	
120 g	
20 mm	
8 Hz	
92 ms	
< 300 ms	
Ics-130/DDD/QP	
3 x pnp, U_B-2 V, I_{max} = 3 x 200 mA	
NOC/NCC adjustable, short-circuit-proof	

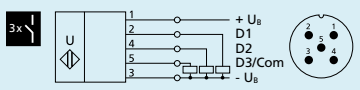

3 pnp switching outputs

	lcs-25	lcs-35
	0.25 m	0.35 m
measuring range	**30 – 350 mm**	**65 – 600 mm**

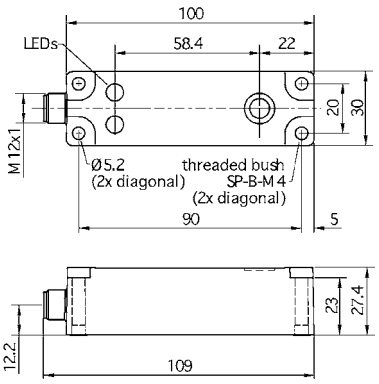

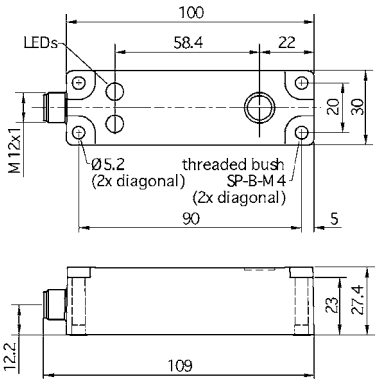

blind zone	30 mm	65 mm
operating range	250 mm	350 mm
maximum range	350 mm	600 mm
angle of beam spread	please see ⓘ	please see ⓘ
transducer frequency	320 kHz	400 kHz
resolution/sampling rate	0.18 mm	0.18 mm
reproducibility	± 0.15 %	± 0.15 %
accuracy	± 1 % (temperature drift internally compensated)	± 1 % (temperature drift internally compensated)
operating voltage U_B	9 V to 30 V DC, reverse polarity protection	9 V to 30 V DC, reverse polarity protection
no-load current consumption	≤ 70 mA	≤ 70 mA
housing	PBT; ultrasonic transducer: polyurethane foam,	PBT; ultrasonic transducer: polyurethane foam,
	epoxy resin with glass content	epoxy resin with glass content
class of protection according to EN 60529	IP 65	IP 65
type of connection	5-pin M12 initiator plug	5-pin M12 initiator plug
controls	com input (pin 5)	com input (pin 5)
scope for settings	• Teach-in via com input on pin 5	• Teach-in via com input on pin 5
	• LCA-2 with LinkControl	• LCA-2 with LinkControl
indicators	2 three-colour LEDs	2 three-colour LEDs
operating temperature	-25°C to +70°C	-25°C to +70°C
storage temperature	-40°C to +85°C	-40°C to +85°C
weight	120 g	120 g
response time[1]	32 ms	64 ms
delay prior to availability	< 300 ms	< 300 ms
order number	**lcs-25/IU/QP**	**lcs-35/IU/QP**
analogue output	current output 4 – 20 mA	current output 4 – 20 mA
	voltage output 0 – 10 V (at $U_B \geq 15$ V),	voltage output 0 – 10 V (at $U_B \geq 15$ V),
	short-circuit-proof, switchable rising/falling	short-circuit-proof, switchable rising/falling

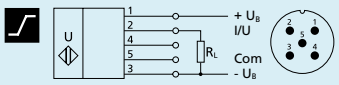

analogue output

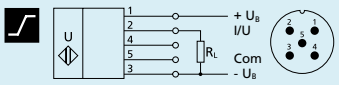

analogue output

[1] Can be programmed with LinkControl.

Ics-130

1.3 m

200 – 2,000 mm

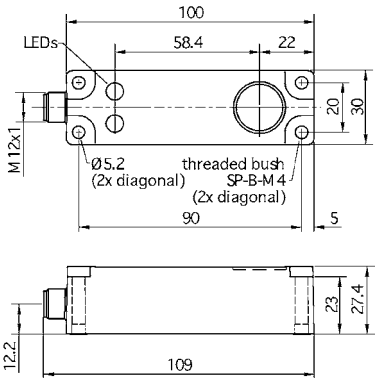

200 mm	
1,300 mm	
2,000 mm	
please see ⓘ	
200 kHz	
0.18 mm to 0.57 mm, depending on	
the analogue window	
± 0.15 %	
± 1 % (temperature drift internally compensated)	
9 V to 30 V DC, reverse polarity protection	
≤ 70 mA	
PBT; ultrasonic transducer: polyurethane foam,	
epoxy resin with glass content	
IP 65	
5-pin M12 initiator plug	
com input (pin 5)	
• Teach-in via com input on pin 5	
• LCA-2 with LinkControl	
2 three-colour LEDs	
-25°C to +70°C	
-40°C to +85°C	
120 g	
92 ms	
< 300 ms	
Ics-130/IU/QP	
current output 4 – 20 mA	
voltage output 0 – 10 V (at $U_B \geq 15$ V),	
short-circuit-proof, switchable rising/falling	

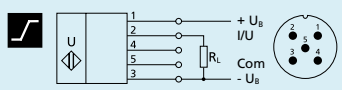

analogue output

ZWS

The zws sensors are among the smallest ultrasonic sensors available on the market in miniature housings with a Teach-in button.

HIGHLIGHTS

- Small ultrasonic sensor in cuboidal housing
- Installation-compatible with many optical sensors › a true alternative for critical applications
- Up to 250 Hz switching frequency › for fast sampling
- Optionally with SoundPipe wave guide attachment
- Synchronisation input
- Improved temperature compensation › adjustment to working conditions within 45 seconds

BASICS

- 1 switching output in pnp or npn variant
- Analogue output 4–20 mA or 0–10 V
- 5 detection ranges with a measurement range of 20 mm to 1 m
- microsonic Teach-in using a button
- 20–30 V operating voltage

The miniature sensor housing

of the zws-15 has dimensions of 20 mm x 32 mm x 12 mm. The housing's design and mounting is compatible with many optical sensors. This facilitates the conversion to ultrasonic sensors for critical applications.

For the zws sensor range

two output versions and five detection ranges are available:

- 1 switching output, optionally in pnp or npn circuitry
- 1 analogue output 4–20 mA or 0–10 V

The Teach-in button

on the top facilitates the convenient setting of the sensor.

Two LEDs

in the sensor housing's upper half indicate the switched output and, respectively the analogue output states.

The zws sensors with switched output have three operating modes:

- Single switching point
- Two-way reflective barrier
- Window mode

Teach-in of a single switching point

by positioning the object to be detected within the desired distance 1 to the sensor, pressing the button for approx. 3 seconds and then pressing it once more for approx. 1 second. Ready.

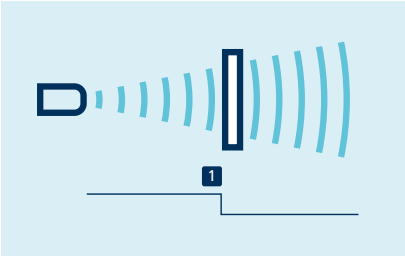

Teach-in of a switching point

Teach-in of a two-way reflective barrier

with a fixed reflector can be set up with the help of a permanently mounted reflector by mounting the zws sensor and the reflector, then pressing the button for approx. 3 seconds and then pressing it once more for approx. 10 seconds. Now, the two-way reflective barrier has been set.

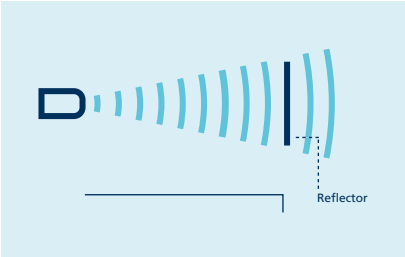

Teach-in of a two-way reflective barrier

Set the analogue output

by initially positioning the object to be detected on the sensor-close window limit 1, pressing the button for approx. 3 seconds, shifting the object

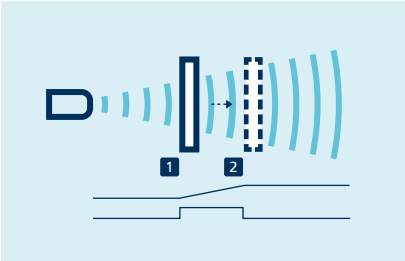

Teach-in of an analogue characteristic or a window with two switching points

to the sensor-distant window limit 2 and pressing the button once more for approx. 1 second. Ready.

To set a window

with two detection points on a single switched output, the procedure is the same as setting the analogue.

NCC/NOC

and rising/falling analogue characteristic curve can also be set using the push-button.

The control input on pin 2

can be used to synchronise multiple zws sensors with each other. The SyncBox2, which is available as an accessory, generates a synchronisation signal output on pin 2. This permits up to 50 zws sensors to be autonomously synchronised (see the chapter "Accessories").

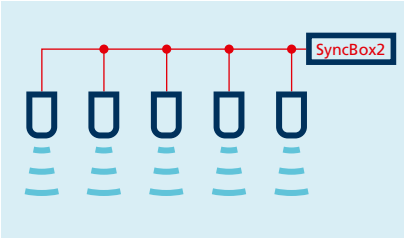

Synchronisation of up to 50 zws sensors

The temperature compensation of the analogue sensors

profits from a significant improvement. The sensors reach their operating point only 45 seconds after activation of the operating voltage.

zws-7: 250 Hz switching frequency for fast measurement

At a maximum detection range of 100 mm, the zws-7 can achieve a switching frequency of 250 Hz.

This allows both detection of objects with a high counting frequency and extremely narrow gaps between two objects at fast machinery speeds. The zws-7 responds in under 3 ms.

Additionally fitting the new SoundPipe to the zws-7 markedly raises the power to detect narrow gaps between two objects at high machine speeds.

The zws-7, with a 250 Hz switching frequency, is particularly suitable for counting tasks at high machine speeds.

Technical data:

Operating range:	70 mm
Maximum range:	100 mm
Switching frequency:	250 Hz
Response time:	< 3 ms

Fast zws-7

zws-7/-15 with SoundPipe

Brings an intensively bundled sound field directly to the measuring point

The SoundPipe can be used with any zws-7 or zws-15 sensor. It directs sound to the measuring point thus allowing measurements to be taken in drill holes and openings with diameters under 5 mm.

Measurement can be carried out directly before the sound exit opening, since the blind zone is inside the SoundPipe.

The SoundPipe is clipped onto the front of the zws-7 or zws-15 sensors (see the chapter "Accessories").

A typical field of application is measuring levels in micro-plate wells which are used in medical analysis technology. The SoundPipe can be directly placed over the opening; this makes exact positioning that much easier. The attachment can also be used in scanning gaps of only a few millimetres in width between two objects.

The zws sensors are ideal for probing of circuit boards and wafers in the electronic industry or for use in packaging machines in which high-transparency films must be detected.

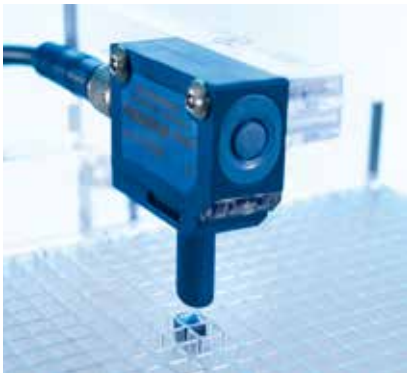

With the SoundPipe, the zws-7/-15 sensor can measure fill levels in the smallest of openings.

The SoundPipe is positioned directly over the measuring point.

	zws-7	zws-15
	0.07 m	0.15 m
measuring range	**20 – 100 mm**	**20 – 250 mm**

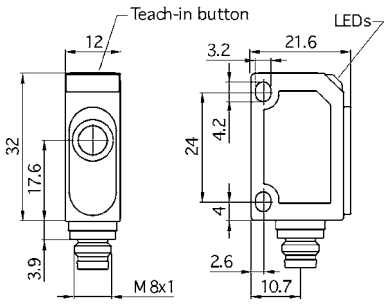

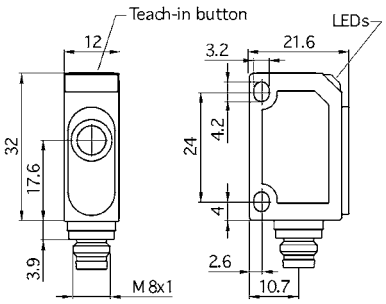

blind zone	20 mm	20 mm
operating range	70 mm	150 mm
maximum range	100 mm	250 mm
angle of beam spread	please see ⓘ	please see ⓘ
transducer frequency	380 kHz	380 kHz
resolution/sampling rate	0.056 mm	0.056 mm
reproducibility	± 0.15 %	± 0.15 %
accuracy	temperature drift 0.17 %/K	temperature drift 0.17 %/K
operating voltage U_B	20 V to 30 V DC, reverse polarity protection	20 V to 30 V DC, reverse polarity protection
no-load current consumption	< 25 mA	< 25 mA
housing	ABS; ultrasonic transducer: polyurethane foam, epoxy resin with glass content	ABS; ultrasonic transducer: polyurethane foam, epoxy resin with glass content
class of protection according to EN 60529	IP 67	IP 67
type of connection	4-pin M8 initiator plug	4-pin M8 initiator plug
controls	push-button	push-button
scope for settings	Teach-in via push-button	Teach-in via push-button
indicators	LED green: working, LED yellow: switch status	LED green: working, LED yellow: switch status
operating temperature	-25°C to +70°C	-25°C to +70°C
storage temperature	-40°C to +85°C	-40°C to +85°C
weight	10 g	10 g
switching hysteresis	2 mm	2 mm
switching frequency	250 Hz	25 Hz
response time	3 ms	24 ms
delay prior to availability	< 300 ms	< 300 ms
order number	**zws-7/CD/QS**	**zws-15/CD/QS**
switching output	pnp, U_B-2 V, I_{max} = 200 mA, NOC/NCC adjustable, short-circuit-proof	pnp, U_B-2 V, I_{max} = 200 mA, NOC/NCC adjustable, short-circuit-proof

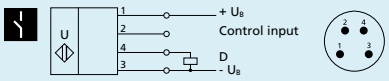

1 pnp switching output

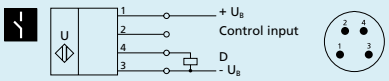

1 pnp switching output

order number	**zws-7/CE/QS**	**zws-15/CE/QS**
switching output	npn, -U_B+2 V, I_{max} = 200 mA, NOC/NCC adjustable, short-circuit-proof	npn, -U_B+2 V, I_{max} = 200 mA, NOC/NCC adjustable, short-circuit-proof

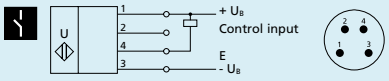

1 npn switching output

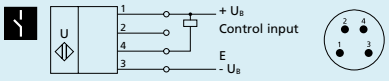

1 npn switching output

zws-24

0.24 m

50 – 350 mm

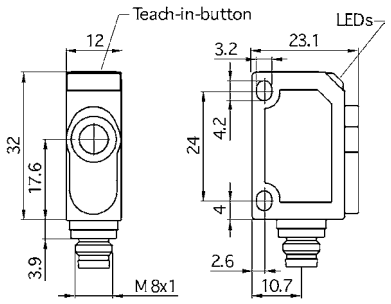

50 mm
240 mm
350 mm
please see ⓘ
500 kHz
0.037 mm
± 0.15 %
temperature drift 0.17 %/K
20 V to 30 V DC, reverse polarity protection
< 25 mA
ABS; ultrasonic transducer: polyurethane foam, epoxy resin with glass content
IP 67
4-pin M8 initiator plug
push-button
Teach-in via push-button
LED green: working, LED yellow: switch status
-25°C to +70°C
-40°C to +85°C
10 g
2 mm
25 Hz
24 ms
< 300 ms
zws-24/CD/QS
pnp, U_B-2 V, I_{max} = 200 mA, NOC/NCC adjustable, short-circuit-proof

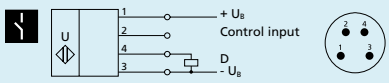

1 pnp switching output

zws-24/CE/QS
npn, -U_B+2 V, I_{max} = 200 mA, NOC/NCC adjustable, short-circuit-proof

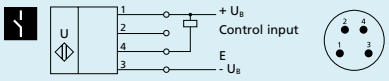

1 npn switching output

zws-25

0.25 m

30 – 350 mm

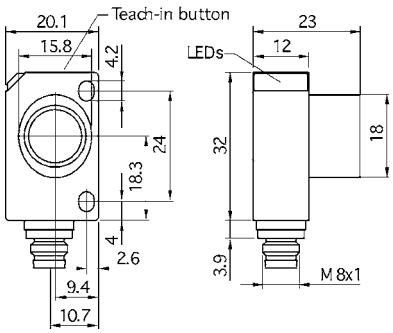

30 mm
250 mm
350 mm
please see ⓘ
320 kHz
0.069 mm
± 0.15 %
temperature drift 0.17 %/K
20 V to 30 V DC, reverse polarity protection
< 25 mA
ABS; ultrasonic transducer: polyurethane foam, epoxy resin with glass content
IP 67
4-pin M8 initiator plug
push-button
Teach-in via push-button
LED green: working, LED yellow: switch status
-25°C to +70°C
-40°C to +85°C
11 g
2 mm
31 Hz
20 ms
< 300 ms
zws-25/CD/QS
pnp, U_B-2 V, I_{max} = 200 mA, NOC/NCC adjustable, short-circuit-proof

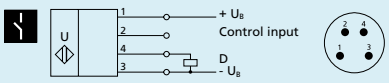

1 pnp switching output

zws-25/CE/QS
npn, -U_B+2 V, I_{max} = 200 mA, NOC/NCC adjustable, short-circuit-proof

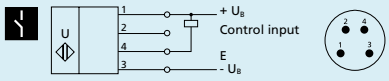

1 npn switching output

zws-70

0.7 m

120 – 1,000 mm

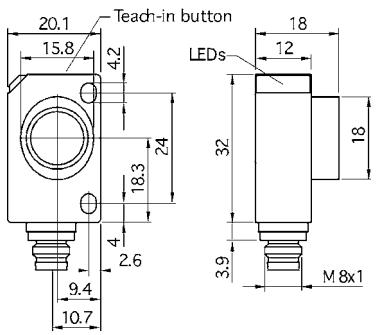

120 mm
700 mm
1,000 mm
please see ⓘ
300 kHz
0.037 mm
± 0.15 %
temperature drift 0.17 %/K
20 V to 30 V DC, reverse polarity protection
< 25 mA
ABS; ultrasonic transducer: polyurethane foam, epoxy resin with glass content
IP 67
4-pin M8 initiator plug
push-button
Teach-in via push-button
LED green: working, LED yellow: switch status
-25°C to +70°C
-40°C to +85°C
11 g
2 mm
11 Hz
36 ms
< 300 ms
zws-70/CD/QS
pnp, U_B-2 V, I_{max} = 200 mA, NOC/NCC adjustable, short-circuit-proof

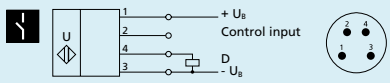

1 pnp switching output

zws-70/CE/QS
npn, -U_B+2 V, I_{max} = 200 mA, NOC/NCC adjustable, short-circuit-proof

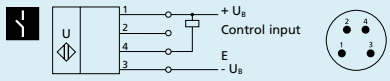

1 npn switching output

	zws-15	zws-24
	0.15 m	0.24 m
measuring range	**20–250 mm**	**55–350 mm**

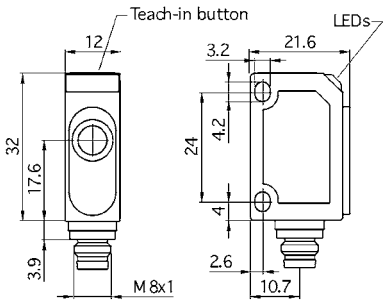

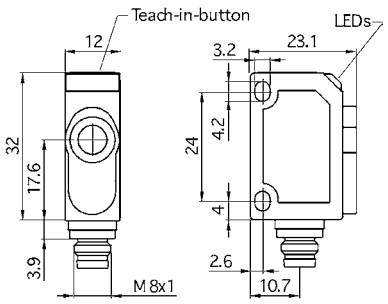

blind zone	20 mm	55 mm
operating range	150 mm	240 mm
maximum range	250 mm	350 mm
angle of beam spread	please see ⓘ	please see ⓘ
transducer frequency	380 kHz	500 kHz
resolution/sampling rate	0.056 mm	0.037 mm to 0.072 mm, depending on the analogue window
reproducibility	± 0.15 %	± 0.15 %
accuracy	± 1 % (temperature drift internally compensated)	± 1 % (temperature drift internally compensated)
operating voltage U_B	20 V to 30 V DC, reverse polarity protection	20 V to 30 V DC, reverse polarity protection
no-load current consumption	< 25 mA	< 25 mA
housing	ABS; ultrasonic transducer: polyurethane foam, epoxy resin with glass content	ABS; ultrasonic transducer: polyurethane foam, epoxy resin with glass content
class of protection according to EN 60529	IP 67	IP 67
type of connection	4-pin M8 initiator plug	4-pin M8 initiator plug
controls	push-button	push-button
scope for settings	Teach-in via push-button	Teach-in via push-button
indicators	LED green: working, LED yellow: object in the window	LED green: working, LED yellow: object in the window
operating temperature	-25°C to +70°C	-25°C to +70°C
storage temperature	-40°C to +85°C	-40°C to +85°C
weight	10 g	10 g
response time	50 ms	50 ms
delay prior to availability	< 300 ms	< 300 ms
order number	**zws-15/CI/QS**	**zws-24/CI/QS**
analogue output	current output 4–20 mA switchable rising/falling	current output 4–20 mA switchable rising/falling

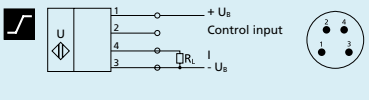

analogue output 4–20 mA

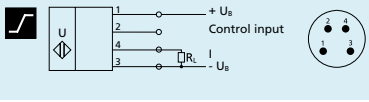

analogue output 4–20 mA

order number	**zws-15/CU/QS**	**zws-24/CU/QS**
analogue output	voltage output 0–10 V short-circuit-proof, switchable rising/falling	voltage output 0–10 V short-circuit-proof, switchable rising/falling

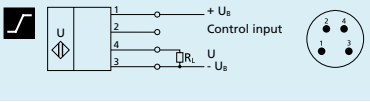

analogue output 0–10 V

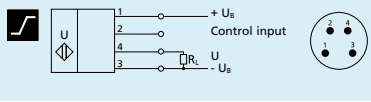

analogue output 0–10 V

zws-70

0.7 m

120 – 1,000 mm

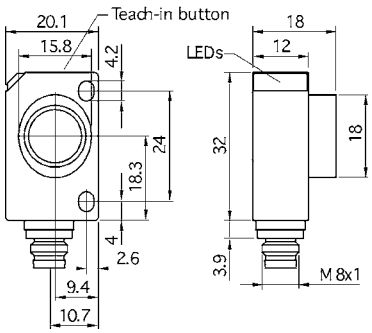

120 mm	
700 mm	
1,000 mm	
please see ⓘ	
300 kHz	
0.037 mm to 0.215 mm, depending on	
the analogue window	
± 0.15 %	
± 1 % (temperature drift internally compensated)	
20 V to 30 V DC, reverse polarity protection	
< 25 mA	
ABS; ultrasonic transducer: polyurethane foam,	
epoxy resin with glass content	
IP 67	
4-pin M8 initiator plug	
push-button	
Teach-in via push-button	
LED green: working, LED yellow: object in the window	
-25°C to +70°C	
-40°C to +85°C	
11 g	
70 ms	
< 300 ms	

zws-70/CI/QS

current output 4 – 20 mA

switchable rising/falling

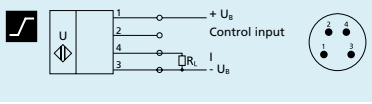

analogue output 4 – 20 mA

zws-70/CU/QS

voltage output 0 – 10 V

short-circuit-proof, switchable rising/falling

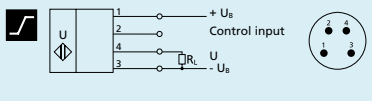

analogue output 0 – 10 V

sks

Our "smallest sensor": the sks sensor in miniature housing.

HIGHLIGHTS

- Very small housing dimensions with two M3 threaded sleeves
- Installation-compatible with many optical sensors › a true alternative for critical applications
- IO-Link interface › for support of the new industry standard
- Optionally with SoundPipe sks1 waveguide attachment
- Improved temperature compensation › adjustment to working conditions within 45 seconds

BASICS

- 1 Push-Pull switching output › pnp or npn basis
- Analogue output 4–20 mA or 0–10 V
- microsonic Teach-in using a button
- 0.1 mm resolution
- 20–30 V operating voltage

IO-Link integrated

Also see the chapter "Function and advantages"

The sks sensors

are the smallest ultrasonic sensors from microsonic and feature a housing design reduced by 33% compared to the zws sensors.

The miniature housing of the sks ultrasonic sensor fits in constricted installation locations e.g. for sampling conductor boards and wafer in the electronics industry, for presence checks on conveyor bands or fill-level measurement in small containers. When capacitive or optical sensors come up against their physical limits, installation compatibility of ultrasonic sensors with many optical sensors enable their deployment: simply secured with two M3 screw sockets.

For the sks sensor range

two output versions are available:

- 1 switching output, optionally in pnp-, npn- or Push-Pull circuitry
- 1 analogue output 4–20 mA or 0–10 V

The temperature compensation

of the analogue sensors profits from a significant improvement. The sensors reach their operating point only 45 seconds after activation of the operating voltage. We now compensate for the influence of self-heating and installation conditions. This brings improved precision shortly after activation of the supply voltage and in running operation.

The Teach-in button

on the top of the sensor allows for the convenient configuration of the desired switching distance and operating mode.

Two LEDs

show the operating state of the sensor.

The sks sensor with switching output has three operating modes:

- Single switching point,
- Two-way reflective barrier and
- Window mode

permit configuration using the usual microsonic Teach-in procedure.

The switched output is set by

positioning the object to be detected within the desired distance 1 to the sensor, pressing the button for approx. 3 seconds and then pressing it once more for approx. 1 second. Ready.

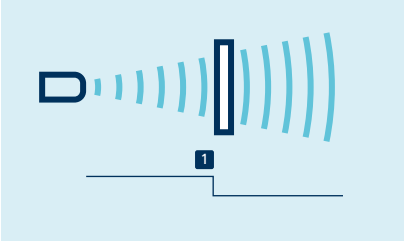

Teach-in of a switching point

A two-way reflective barrier

can be set up with the help of a permanently mounted reflector by mounting the sks sensor and the reflector. Then press the button for approx. 3 seconds and then pressing it once more for approx. 10 seconds. Now, the two-way reflective barrier has been set.

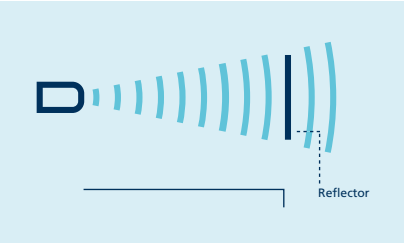

Teach-in of a two-way reflective barrier

Set the analogue output

by initally positioning the object to be detected on the sensor-close window limit 1, pressing the button for approx. 3 seconds, shifting the object to the sensor-distant window limit and pressing the button once more for approx. 1 second. Ready.

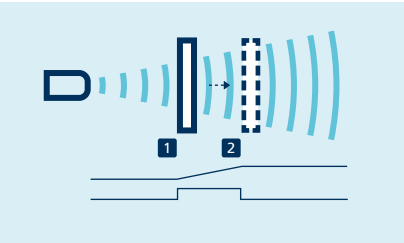

Teach-in of an analogue characteristic or a with two switching points

To set a window

with two detection points on a single switched output, the procedure is the same as setting the analogue.

NCC/NOC

and rising/ falling analogue characteristic curve can also be set using the button.

SoundPipe sks1

intensively bundles the sound field and allows measurements in openings with small diameters. The SoundPipe sks1 (see in the chapter "Accessoires") is pushed on the transducer of the sks.

IO-Link integrated

in version 1.1 for sensors with Push-Pull output.

sks-15

0.15 m

measuring range	20–250 mm

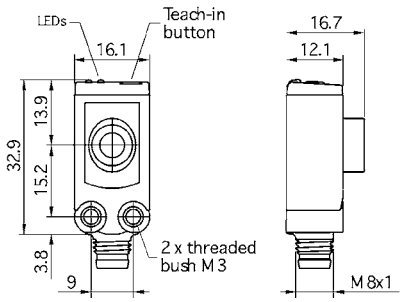

blind zone	20 mm
operating range	150 mm
maximum range	250 mm
angle of beam spread	please see ⓘ
transducer frequency	380 kHz
resolution/sampling rate	0.1 mm
reproducibility	± 0.15 %
accuracy	± 1 % (temperature drift internally compensated)
operating voltage U_B	20 V to 30 V DC, reverse polarity protection
no-load current consumption	≤ 25 mA
housing	ABS; ultrasonic transducer: polyurethane foam, epoxy resin with glass content
class of protection according to EN 60529	IP 67
type of connection	4-pin M8 initiator plug
controls	push-button
scope for settings	• Teach-in via push-button
	• IO-Link
indicators	LED green: working,
	LED yellow: switch status
IO-Link	V 1.1
IO-Link SIO mode support	yes
IO-Link min. cycle time	8 ms
Smart Sensor Profile	yes
operating temperature	-25°C to +70°C
storage temperature	-40°C to +85°C
weight	8 g
switching hysteresis	2 mm
switching frequency	25 Hz
response time	32 ms
delay prior to availability	< 300 ms
order number	**sks-15/CF/A**
switching output	Push-Pull, U_B-3 V, -U_B+3 V, I_{max} = 100 mA

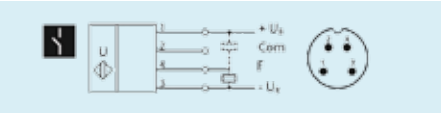

1 Push-Pull switching output

	sks-15	sks-15
	0.15 m	0.15 m
measuring range	**20–250 mm**	**20–250 mm**

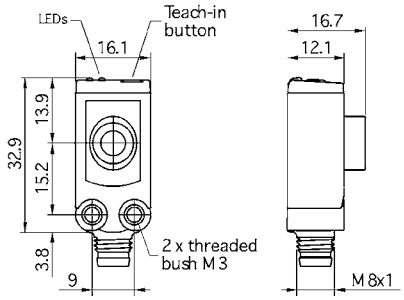

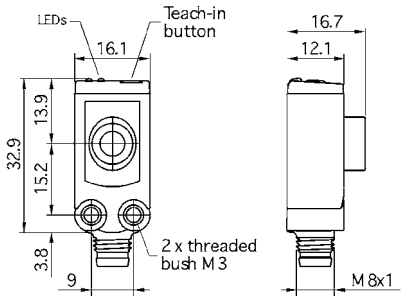

blind zone	20 mm	20 mm
operating range	150 mm	150 mm
maximum range	250 mm	250 mm
angle of beam spread	please see ⓘ	please see ⓘ
transducer frequency	380 kHz	380 kHz
resolution/sampling rate	0.1 mm	0.1 mm
reproducibility	± 0.15 %	± 0.15 %
accuracy	temperature drift 0.17 %/K	± 1 % (temperature drift internally compensated)
operating voltage U_B	20 V to 30 V DC, reverse polarity protection	20 V to 30 V DC, reverse polarity protection
no-load current consumption	≤ 25 mA	≤ 25 mA
housing	ABS; ultrasonic transducer: polyurethane foam, epoxy resin with glass content	ABS; ultrasonic transducer: polyurethane foam, epoxy resin with glass content
class of protection according to EN 60529	IP 67	IP 67
type of connection	3-pin M8 initiator plug	4-pin M8 initiator plug
controls	push-button	push-button
scope for settings	• Teach-in via push-button	• Teach-in via push-button
indicators	LED green: working, LED yellow: switch status	LED green: working, LED yellow: switch status
operating temperature	-25°C to +70°C	-25°C to +70°C
storage temperature	-40°C to +85°C	-40°C to +85°C
weight	8 g	8 g
switching hysteresis	2 mm	2 mm
switching frequency	25 Hz	25 Hz
response time	32 ms	32 ms
delay prior to availability	< 300 ms	< 300 ms
order number	**sks-15/D**	**sks-15/CD**
switching output	pnp, U_B-2 V, I_{max} = 200 mA, NOC/NCC adjustable, short-circuit-proof	pnp, U_B-2 V, I_{max} = 200 mA, NOC/NCC adjustable, short-circuit-proof

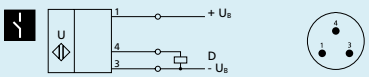

1 pnp switching output

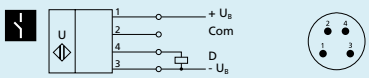

1 pnp switching output

order number	**sks-15/E**	**sks-15/CE**
switching output	npn, -U_B+2 V, I_{max} = 200 mA, NOC/NCC adjustable, short-circuit-proof	npn, -U_B+2 V, I_{max} = 200 mA, NOC/NCC adjustable, short-circuit-proof

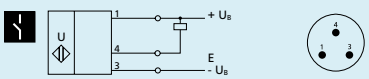

1 npn switching output

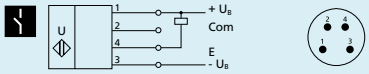

1 npn switching output

sks-15

0.15 m

measuring range	20–250 mm

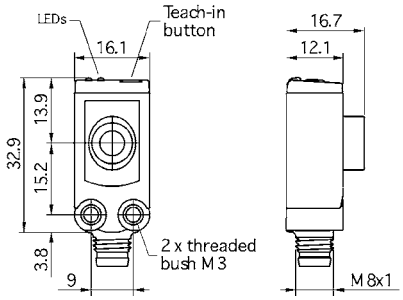

blind zone	20 mm
operating range	150 mm
maximum range	250 mm
angle of beam spread	please see ⓘ
transducer frequency	380 kHz
resolution/sampling rate	0.1 mm
reproducibility	± 0.15 %
accuracy	± 1 % (temperature drift internally compensated)
operating voltage U_B	15 V to 30 V DC, reverse polarity protection
no-load current consumption	≤ 25 mA
housing	ABS; ultrasonic transducer: polyurethane foam, epoxy resin with glass content
class of protection according to EN 60529	IP 67
type of connection	4-pin M8 initiator plug
controls	push-button
scope for settings	• Teach-in via push-button
indicators	LED green: working, LED yellow: switch status
operating temperature	-25°C to +70°C
storage temperature	-40°C to +85°C
weight	8 g
response time	24 ms
delay prior to availability	< 300 ms

order number	**sks-15/CI**
analogue output	current output 4–20 mA switchable rising/falling

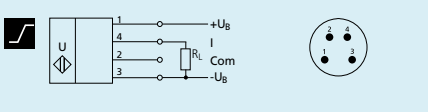

analogue output 4–20 mA

order number	**sks-15/CU**
analogue output	voltage output 0–10 V short-circuit-proof, switchable rising/falling

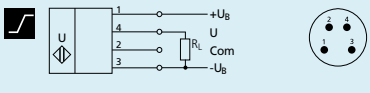

analogue output 0–10 V

UCS

The ucs sensors in sturdy metal housing are mechanically compatible with the industrial standard of optical sensors.

HIGHLIGHTS

- Robust metal housing › for harsh usage conditions
- Dovetail design › for fast installation
- Mechanically compatible with the industry standard › a true alternative to the optical sensor
- Automatic synchronisation › for simultaneous operation of up to ten sensors in close quarters

BASICS

- 2 anti-valent switching outputs in pnp or npn variant
- microsonic Teach-in using a button
- 0.1 mm resolution
- Temperature compensation
- 10–30 V operating voltage
- LinkControl › for configuration of sensors from a PC

The sturdy metal housing

of the ucs sensors is mechanically compatible with the industrial standard of optical sensors.

The rotatable circular connector

allows for flexible selection of the mounting location and facilitates flexible wiring.

The ucs sensors

are available with 2 anti-valent pnp or npn switching outputs.

With the anti-valent switching behaviour of the two switching outputs, the first output works as an NO contact and the second works complementarily as an NC contact.

The Teach-in button

on the sensor's top allows for a convenient setting of the desired detection distance and operating mode.

A dual LED

indicates the switching status of the two anti-valent switching outputs.

The ucs sensors have three operating modes:

- Single switching point
- Two-way reflective barrier
- Window mode

The switched output is set by

positioning the object to be detected within the desired distance 1 to the sensor, pressing the button for approx. 3 seconds and then pressing it once more for approx. 1 second. Ready.

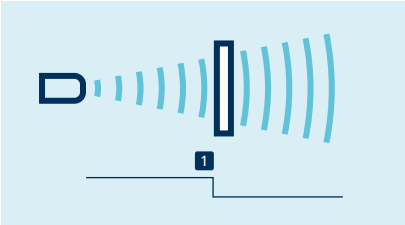

Teach-in of a switching point

A two-way reflective barrier

can be set with the help of a permanently mounted reflector by mounting the ucs sensor and the reflector, then pressing the button for approx. 3 seconds and then pressing it once more for approx. 10 seconds. Now, the two-way reflective barrier has been set.

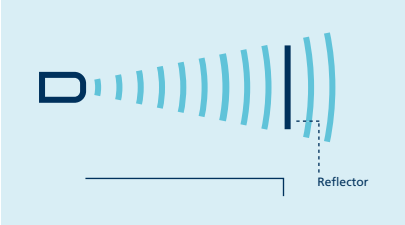

Teach-in of a two-way reflective barrier

Set a window

by initially positioning the object to be detected on the sensor-close window limit 1, pressing the button for approx. 3 seconds, shifting the object to the sensor-distant window limit 2 and pressing the button once more for approx. 1 second. Ready.

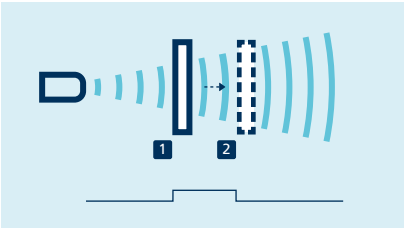

Teach-in of a window with two switching points

Up to ten sensors

can be synchronised with one another. To do this, all the sensors are electrically connected on pin 5 on the M12 circular connector.

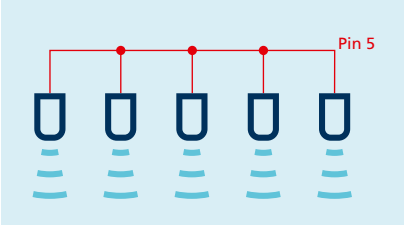

Synchronisation using pin 5

If more than ten sensors need to be synchronised, this can be carried out with the SyncBox1, which is available as an accessory.

LinkControl

optionally permits the extensive parameterisation of ucs sensors. The LCA-2 LinkControl adapter, which is available as an accessory, can be used to connect ucs sensors to the PC.

Sensor connected to the PC via LCA-2 for programming

	ucs-15	ucs-24
	0.15 m	0.24 m
measuring range	**20 – 250 mm**	**55 – 350 mm**

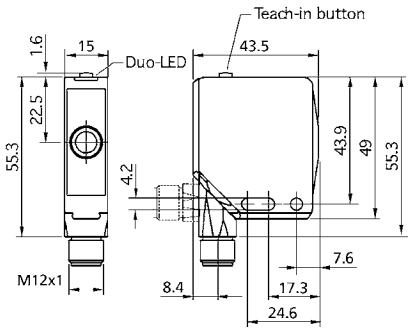

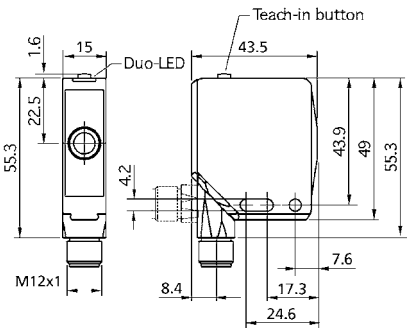

	ucs-15	ucs-24
blind zone	20 mm	55 mm
operating range	150 mm	240 mm
maximum range	250 mm	350 mm
angle of beam spread	please see ⓘ	please see ⓘ
transducer frequency	380 kHz	500 kHz
resolution/sampling rate	0.056 mm	0.056 mm
reproducibility	± 0.15 %	± 0.15 %
accuracy	± 1 % (temperature drift internally compensated)	± 1 % (temperature drift internally compensated)
operating voltage U_B	10 V to 30 V DC, reverse polarity protection	10 V to 30 V DC, reverse polarity protection
no-load current consumption	≤ 30 mA	≤ 40 mA
housing	zinc die-casting; plastic parts: PBT; ultrasonic transducer: polyurethane foam, epoxy resin with glass content	zinc die-casting; plastic parts: PBT; ultrasonic transducer: polyurethane foam, epoxy resin with glass content
class of protection according to EN 60529	IP 67	IP 67
type of connection	5-pin M12 initiator plug	5-pin M12 initiator plug
controls	push-button	push-button
scope for settings	• Teach-in via push-button • LCA-2 with LinkControl	• Teach-in via push-button • LCA-2 with LinkControl
indicators	duo-LED, LED green: working, LED yellow: switch status	duo-LED, LED green: working, LED yellow: switch status
operating temperature	-25°C to +70°C	-25°C to +70°C
storage temperature	-40°C to +85°C	-40°C to +85°C
weight	75 g	75 g
switching hysteresis[1]	2 mm	2 mm
switching frequency[1]	25 Hz	25 Hz
response time[1]	24 ms	24 ms
delay prior to availability	< 300 ms	< 300 ms
order number	**ucs-15/CDD/QM**	**ucs-24/CDD/QM**
switching outputs	2 x pnp, U_B-2 V, I_{max} = 2 x 200 mA, NOC/NCC adjustable, anti-valent, short-circuit-proof	2 x pnp, U_B-2 V, I_{max}= 2 x 200 mA, NOC/NCC adjustable, anti-valent, short-circuit-proof

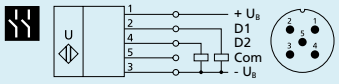

2 pnp switching outputs

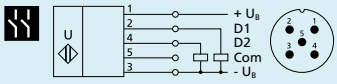

2 pnp switching outputs

	ucs-15	ucs-24
order number	**ucs-15/CEE/QM**	**ucs-24/CEE/QM**
switching outputs	2 x npn, -U_B+2 V, I_{max} = 2 x 200 mA, NOC/NCC adjustable, anti-valent, short-circuit-proof	2 x npn, -U_B+2 V, I_{max} = 2 x 200 mA, NOC/NCC adjustable, anti-valent, short-circuit-proof

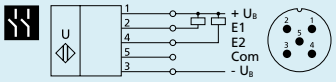

2 npn switching outputs

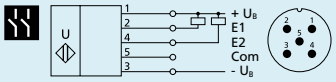

2 npn switching outputs

[1] Can be programmed with LinkControl.

pms

The design of the wash-down stainless steel housing with no crevices and dirt edges makes pms sensor perfectly suited for intensive cleaning and disinfection.

HIGHLIGHTS

- Innovative housing in Hygienic Design › easy to clean, designed conform to EHEDG guidelines
- Two stainless-steel housings › for use in the food and pharmaceutical industry
- PTFE membrane › for protection against aggressive media
- Sealed against the housing with an O-ring made from FKM › for the highest possible chemical resistance
- ECOLAB certified and FDA-compliant materials
- IO-Link interface › for support of the new industry standard

BASICS

- 1 Push-Pull switching output › pnp or npn basis
- Analogue output 4–20 mA or 0–10 V
- 4 detection ranges with a measurement range of 20 mm to 1.3 m
- Temperature compensation
- 9–30 V operating voltage
- LinkControl › for configuration of sensors from a PC

IO-Link integrated

Also see the chapter "Function and advantages"

The pms ultrasonic sensors

are designed for the most demanding hygienic requirements according to EHEDG guidelines. Two versions of the sensor are available: D12 adapter shaft and D12 bayonet catch. The standard version D12 adapter shaft is mounted with a hygienic screw connection BF-pms/A1 or an adequate mounting clip.

The innovative design of the stainless steel housing ensures that the pms sensor has no horizontal surfaces in almost all conceivable installation positions. Even with horizontal installation of the hygienic sensor for measuring vertical downwards, the rear side of the housing maintains an angle of ≥ 3°. Cleaning fluids can safely drain off the housing.

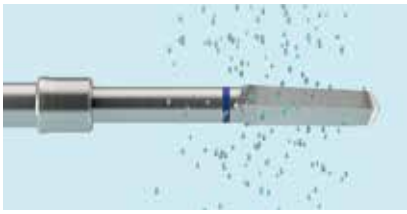

Rear side of the housing with an incline of ≥ 3°

The smooth stainless steel housing has a roughness depth of Ra < 0.8 µm and has no crevices and dirt edges. Besides the sensor design, the right material is crucial. The ultrasonic transducer is protected by a PTFE foil and withstands chemically aggressive cleaning agents and disinfectants. The pms has a high endurance and is ECOLAB certified.

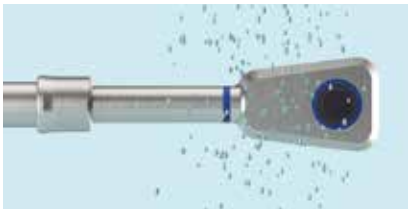

Stainless-steel sensor in wash-down design, all horizontal surfaces are at least inclined by 3°

For the pms hygiene sensors

there are 2 output stages and 4 detection ranges available:

- 1 Push-Pull switching output with pnp or npn switching technology
- 1 analogue output 4–20 mA or 0–10 V

Sensors with switching output have three operating modes:

- Single switching point
- Two-way reflective barrier
- Window mode

Teach-in of a single switching point

- Place object to be detected at the desired distance 1
- Apply $+U_B$ to pin 2 for about 3 seconds
- Then apply $+U_B$ to pin 2 again for about 1 second

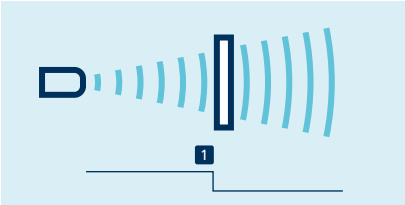

Teach-in of a switching point

Teach-in of a two-way reflective barrier

with a fixed reflector

- Apply $+U_B$ to pin 2 for about 3 seconds
- Then apply $+U_B$ to pin 2 again for about 10 seconds

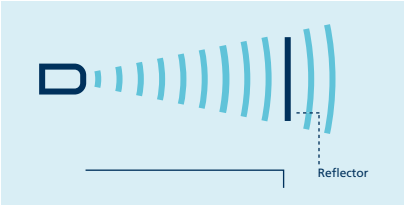

Teach-in of a two-way reflective barrier

For setting an analogue output

- initially position the object to be detected on the sensor-close window limit 1
- Apply $+U_B$ to pin 2 for about 3 seconds
- Move the object to the sensor-distant window limit 2
- Then apply $+U_B$ to pin 2 again for about 1 second

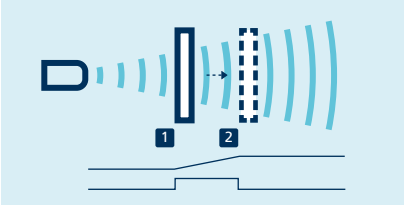

Teach-in of an analogue characteristic or a window with two switching points

To set a window

with two switching points on a single switch output, the procedure is the same as setting the analogue.

NCC/NOC

and rising/falling analogue characteristic curve can also be set via pin 2.

LinkControl

consist of LinkControl adapter LCA-2 and LinkControl software and permits the configuration of pms sensors via PC or laptop with all conventional Windows® operating systems. For configuration of pms sensors, the additional adapter 5G/M12-4G/M12/M8 is needed.

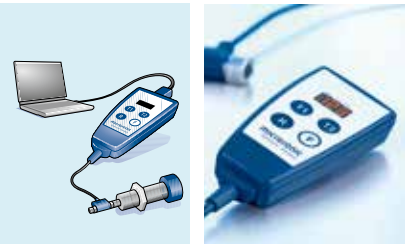

Sensor connected to the PC via LCA-2 for programming

With the hygienic screw connection

BF-pms/A1 (accessory), the pms sensor is mounted hygienically. The screw connection has a ECOLAB and EHEDG certificate.

pms sensor D12 adapter shaft with hygienic screw connection BF-pms/A1

IO-Link integrated

in version 1.1 for sensors with switching output. The pms ultrasonic sensors are equipped with Smart Sensor Profile, which creates more transparency between IO-Link devices.

The compact pms ultrasonic sensor

is made of stainless steel and FDA-conform materials.

Ensures high resistance

to cleaning agents in areas coming into contact with products in the pharmaceuticals, food and beverage industry.

The innovative hygiene design

was designed in accordance with EHEDG guidelines. Certification has been applied for.

Beverage industry

The pms ultrasonic sensor detects glass and PET bottles in operating mode and withstands the cleaning intervals of filling machines. The sensor is mounted with the hygienic sensor mounting BF-pms/A1. For example, pms-25/F... with Push-Pull switching output to count bottles.

Within the food industry

containers have to be counted or positioned, volume flow checked on conveyor belts, or food items have to be controlled on filling level and completeness. Two pms ultrasonic sensors monitor the completeness of apples in packaging boxes. For example, 2 x pms-25/F... each with Push-Pull switching output for height control.

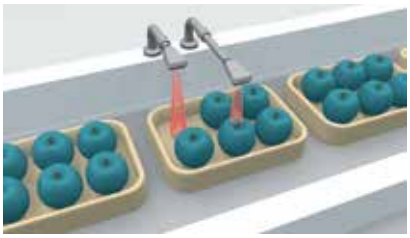

Within the pharma industry

ampoules and glass vials have to be counted and the volume flow in the filling level process has to be controlled. On a turntable, a pms sensor controls the volume flow of glass vials ahead of the filling line. For example, pms-35/U... with voltage output 0–10 V.

	pms-15	pms-25
	0.15 m	0.25 m
measuring range	**20 – 250 mm**	**30 – 350 mm**

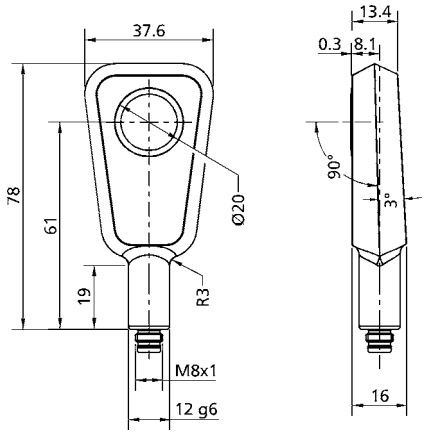

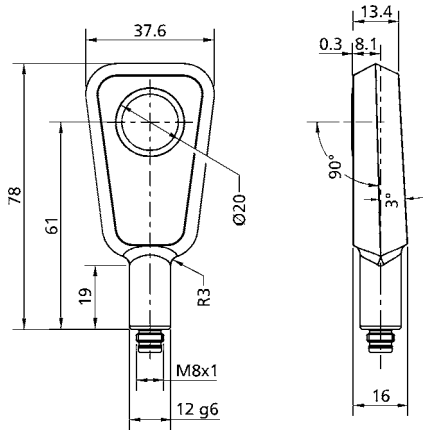

blind zone	20 mm	30 mm
operating range	150 mm	250 mm
maximum range	250 mm	350 mm
angle of beam spread	please see ⓘ	please see ⓘ
transducer frequency	380 kHz	320 kHz
resolution/sampling rate	0.1 mm	0.1 mm
reproducibility	± 0.15 %	± 0.15 %
accuracy	± 1 % (temperature drift internally compensated)	± 1 % (temperature drift internally compensated)
operating voltage U_B	10 to 30 V DC, reverse polarity protection	10 to 30 V DC, reverse polarity protection
no-load current consumption	≤ 40 mA	≤ 40 mA
housing	stainless steel 1.4404/316	stainless steel 1.4404/316
	ultrasonic transducer: PTFE, FKM	ultrasonic transducer: PTFE, FKM
class of protection according to EN 60529	IP 66, IP 67, IP 68	IP 66, IP 67, IP 68
ECOLAB	yes	yes
type of connection	4-pin M8 initiator plug	4-pin M8 initiator plug
controls	com input (pin 2)	com input (pin 2)
scope for settings	• Teach-in via com input on pin 2	• Teach-in via com input on pin 2
	• LCA-2 with LinkControl	• LCA-2 with LinkControl
	• IO-Link	• IO-Link
IO-Link	V 1.1	V 1.1
IO-Link SIO mode support	yes	yes
IO-Link min. cycle time	8 ms	8 ms
Smart Sensor Profile	yes	yes
operating temperature	-25°C to +70°C	-25°C to +70°C
storage temperature	-40°C to +85°C	-40°C to +85°C
weight	110 g	110 g
switching hysteresis[1)]	2 mm	3 mm
switching frequency[1)]	25 Hz	25 Hz
response time[1)]	32 ms	32 ms
delay prior to availability	< 300 ms	< 300 ms
order number	**pms-15/CF/A1**	**pms-25/CF/A1**
switching output	Push-Pull, U_B-3 V, -U_B+3 V, I_{max} = 100 mA	Push-Pull, U_B-3 V, -U_B+3 V, I_{max} = 100 mA

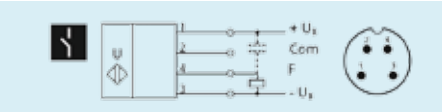

1 Push-Pull switching output

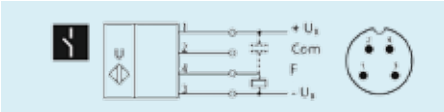

1 Push-Pull switching output

[1)] Can be programmed with LinkControl and IO-Link.

pms-35	pms-100	
0.35 m	1.0 m	
65 – 600 mm	**120 – 1,300 mm**	

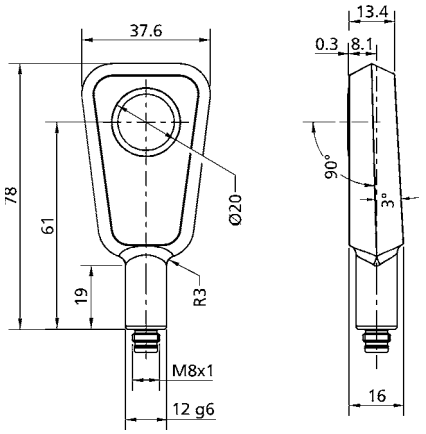

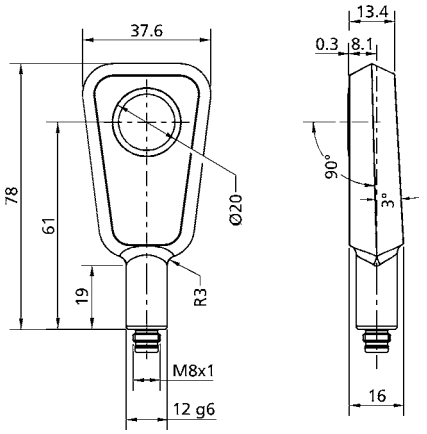

65 mm	120 mm	
350 mm	1,000 mm	
600 mm	1,300 mm	
please see ⓘ	please see ⓘ	
400 kHz	200 kHz	
0.1 mm	0.1 mm	
± 0.15 %	± 0.15 %	
± 1 % (temperature drift internally compensated)	± 1 % (temperature drift internally compensated)	
10 to 30 V DC, reverse polarity protection	10 to 30 V DC, reverse polarity protection	
≤ 40 mA	≤ 40 mA	
stainless steel 1.4404/316	stainless steel 1.4404/316	
ultrasonic transducer: PTFE, FKM	ultrasonic transducer: PTFE, FKM	
IP 66, IP 67, IP 68	IP 66, IP 67, IP 68	
yes	yes	
4-pin M8 initiator plug	4-pin M8 initiator plug	
com input (pin 2)	com input (pin 2)	
• Teach-in via com input on pin 2	• Teach-in via com input on pin 2	
• LCA-2 with LinkControl	• LCA-2 with LinkControl	
• IO-Link	• IO-Link	
V 1.1	V 1.1	
yes	yes	
16 ms	20 ms	
yes	yes	
-25°C to +70°C	-25°C to +70°C	
-40°C to +85°C	-40°C to +85°C	
110 g	110 g	
5 mm	20 mm	
12 Hz	10 Hz	
64 ms	80 ms	
< 300 ms	< 300 ms	
pms-35/CF/A1	**pms-100/CF/A1**	
Push-Pull, U_B-3 V, -U_B+3 V, I_{max} = 100 mA	Push-Pull, U_B-3 V, -U_B+3 V, I_{max} = 100 mA	

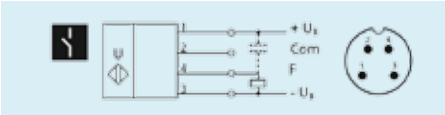

1 Push-Pull switching output

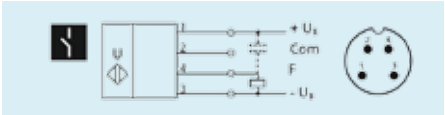

1 Push-Pull switching output

	pms-15	pms-25
	0.15 m	0.25 m
measuring range	**20 – 250 mm**	**30 – 350 mm**

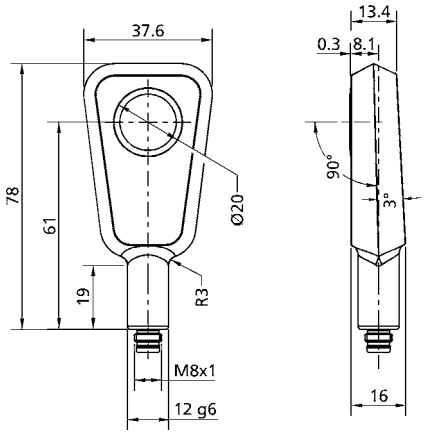

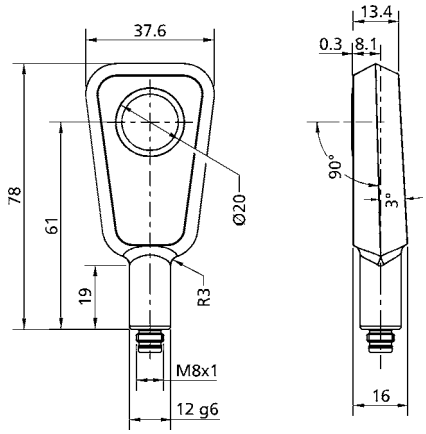

blind zone	20 mm	30 mm
operating range	150 mm	250 mm
maximum range	250 mm	350 mm
angle of beam spread	please see ⓘ	please see ⓘ
transducer frequency	380 kHz	320 kHz
resolution/sampling rate	0.069 mm	0.069 mm to 0.10 mm,
		depending on the analogue window
reproducibility	± 0.15 %	± 0.15 %
accuracy	± 1 % (temperature drift internally compensated)	± 1 % (temperature drift internally compensated)
operating voltage U_B	10 to 30 V DC, reverse polarity protection	10 to 30 V DC, reverse polarity protection
no-load current consumption	≤ 40 mA	≤ 40 mA
housing	stainless steel 1.4404/316	stainless steel 1.4404/316
	ultrasonic transducer: PTFE, FKM	ultrasonic transducer: PTFE, FKM
class of protection according to EN 60529	IP 66, IP 67, IP 68	IP 66, IP 67, IP 68
ECOLAB	yes	yes
type of connection	4-pin M8 initiator plug	4-pin M8 initiator plug
controls	com input (pin 2)	com input (pin 2)
scope for settings	• Teach-in via com input on pin 2	• Teach-in via com input on pin 2
	• LCA-2 with LinkControl	• LCA-2 with LinkControl
operating temperature	-25°C to +70°C	-25°C to +70°C
storage temperature	-40°C to +85°C	-40°C to +85°C
weight	110 g	110 g
switching hysteresis[1]	2 mm	3 mm
switching frequency[1]	25 Hz	25 Hz
response time[1]	24 ms	24 ms
delay prior to availability	< 300 ms	< 300 ms
order number	**pms-15/CI/A1**	**pms-25/CI/A1**
analogue output	current output 4–20 mA, switchable rising/falling	current output 4–20 mA, switchable rising/falling

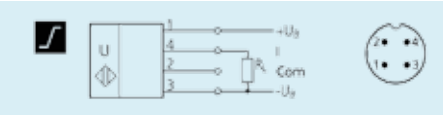

analogue output 4–20 mA

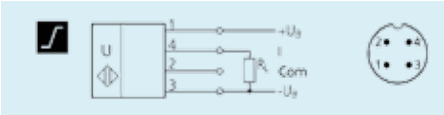

analogue output 4–20 mA

order number	**pms-15/CU/A1**	**pms-25/CU/A1**
analogue output	voltage output 0–10 V (at $U_B \geq 15$ V)	voltage output 0–10 V (at $U_B \geq 15$ V)
	short-circuit-proof, switchable rising/falling	short-circuit-proof, switchable rising/falling

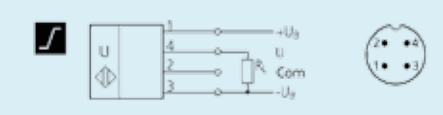

analogue output 0–10 V

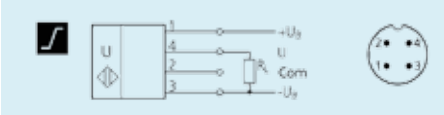

analogue output 0–10 V

[1] Can be programmed with LinkControl.

pms-35	pms-100	
0.35 m	1.0 m	
65–600 mm	**120–1,300 mm**	

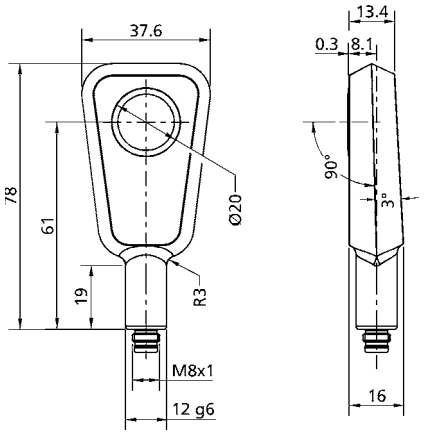

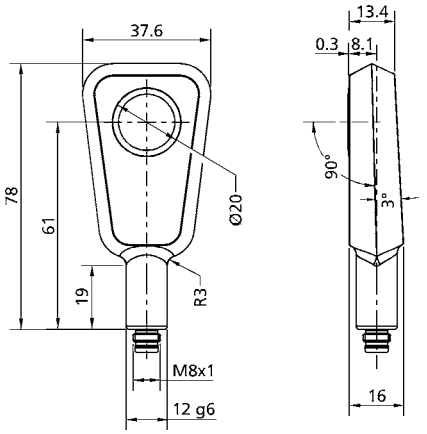

65 mm	120 mm	
350 mm	1,000 mm	
600 mm	1,300 mm	
please see ⓘ	please see ⓘ	
400 kHz	200 kHz	
0.069 mm to 0.17 mm,	0.069 mm to 0.38 mm,	
depending on the analogue window	depending on the analogue window	
± 0.15 %	± 0.15 %	
± 1 % (temperature drift internally compensated)	± 1 % (temperature drift internally compensated)	
10 to 30 V DC, reverse polarity protection	10 to 30 V DC, reverse polarity protection	
≤ 40 mA	≤ 40 mA	
stainless steel 1.4404/316	stainless steel 1.4404/316	
ultrasonic transducer: PTFE, FKM	ultrasonic transducer: PTFE, FKM	
IP 66, IP 67, IP 68	IP 66, IP 67, IP 68	
yes	yes	
4-pin M8 initiator plug	4-pin M8 initiator plug	
com input (pin 2)	com input (pin 2)	
• Teach-in via com input on pin 2	• Teach-in via com input on pin 2	
• LCA-2 with LinkControl	• LCA-2 with LinkControl	
-25°C to +70°C	-25°C to +70°C	
-40°C to +85°C	-40°C to +85°C	
110 g	110 g	
5 mm	20 mm	
12 Hz	10 Hz	
48 ms	60 ms	
< 300 ms	< 300 ms	
pms-35/CI/A1	**pms-100/CI/A1**	
current output 4–20 mA, switchable rising/falling	current output 4–20 mA, switchable rising/falling	

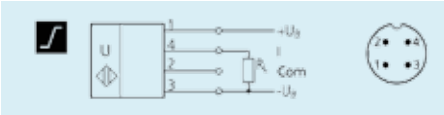

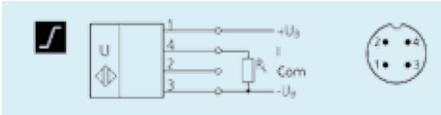

analogue output 4–20 mA	analogue output 4–20 mA	
pms-35/CU/A1	**pms-100/CU/A1**	
voltage output 0–10 V (at $U_B \geq 15$ V)	voltage output 0–10 V (at $U_B \geq 15$ V)	
short-circuit-proof, switchable rising/falling	short-circuit-proof, switchable rising/falling	

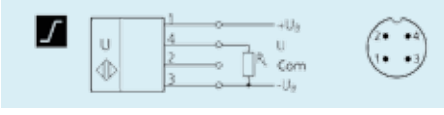

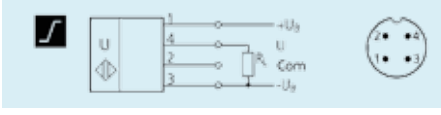

analogue output 0–10 V	analogue output 0–10 V	

pico+TF

The pico+TF sensors are ideal for the non-contact fill level measurement of chemically aggressive liquids or granules.

HIGHLIGHTS

- PTFE membrane › for protection against aggressive media
- M22 sleeve in PVDF
- IO-Link interface › for support of new industry standard
- Automatic synchronisation and multiplex operation › for simultaneous operation of up to ten sensors in close quarters
- Improved temperature compensation › adjustment to working conditions within 120 seconds

BASICS

- 1 Push-Pull switching output › pnp or npn basis
- Analogue output 4–20 mA or 0–10 V
- 4 detection ranges with a measurement range of 25 mm to 1,300 mm
- microsonic Teach-in on pin 5
- 0.069 mm resolution
- 10–30 V operating voltage
- LinkControl › for configuration of sensors from a PC

IO-Link integrated

Also see the chapter "Function and advantages"

The pico+TF ultrasonic sensors

The compact dimensions of the pico+TF sensors makes them ideal for fill-level measurement in housings of restricted dimensions. The ultrasonic transformer is protected against aggressive media by a PTFE film. The exterior PVDF coating with its M22 x 1.5 external thread seals the ultrasonic transformer from the sensor housing. The M22 sensors detect in a contactless fashion and are reliable within a measuring range of 25 mm to 1,300 mm. The ultrasonic sensor is the best choice for non-contact fill level measurement with chemically aggressive liquids or granules. A typical application for these sensor line is the fill level monitoring of aggressive paints and inks such as those used in the digital printing sector. These inks often contain ketone. In addition to the high chemical resistance of the sensor, its size makes it especially suited to use in restricted spaces. Regular filling and emptying of the tank can produce wave motions in the tank system, which can be compensated using the internal filter setting.

For the pico+TF sensor family

there are two output stages and four detection ranges available:

- 1 Push-Pull switching output with pnp and npn switching technology
- 1 analogue output 4–20 mA or 0–10 V

Sensors with switching output have three operating modes:

- Single switching point
- Two-way reflective barrier
- Window mode

The pico+TF ultrasonic sensor continuously detects the fill level of liquids and granules

Teach-in of a single switching point

- Place object to be detected at the desired distance 1.
- Apply $+U_B$ to pin 5 for about 3 seconds.
- Then apply $+U_B$ to pin 5 again for about 1 second.

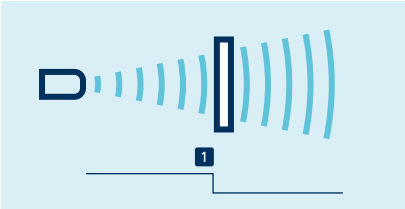

Teach-in of a switching point

For configuration of a window

- Place object at the near edge of the window 1.
- Apply $+U_B$ to pin 5 for about 3 seconds.
- Then move the object to the far edge of the window 2.
- Then apply $+U_B$ to pin 5 again for about 1 seconds.

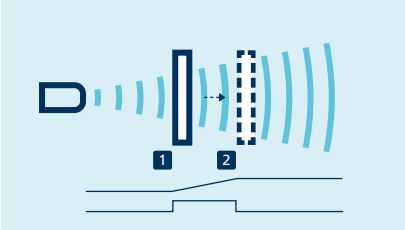

Teach-in of an analogue characteristic or a window with two switching points

NCC/NOC

and rising/falling analogue characteristic curve can also be set via pin 5.

One green and one yellow LED

indicate the state of the output and support microsonic Teach-in.

LinkControl

optionally permits the extensive parameterisation of pico+TF level sensors. The LCA-2 LinkControl adapter, which is available as an accessory, can be used to connect pico+TF sensors to the PC.

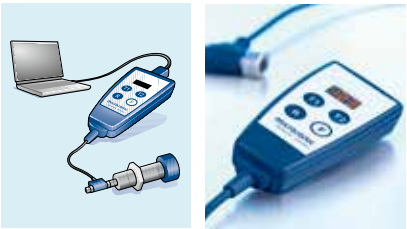

Sensor connected to the PC via LCA-2 for programming

Easy to synchronise

A number of pico+TF level sensors can be run closely packed in applications synchronised to stop them from influencing one another. To this end, the sync mode has to be activated and all the sensors are to be electrically connected one to another with pin 5.

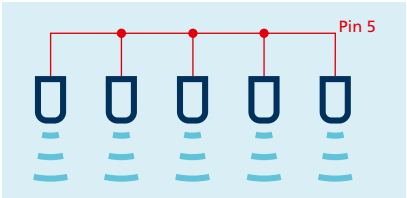

Synchronisation via pin 5

IO-Link integrated

in version 1.1 for sensors with switching output.

	pico+15/TF	pico+25/TF
	0.15 m	0.25 m
measuring range	**20–250 mm**	**30–350 mm**

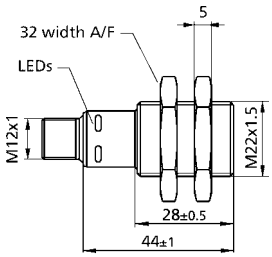

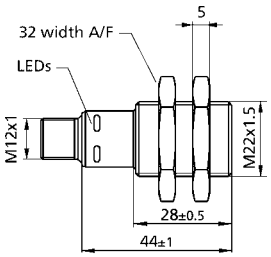

blind zone	20 mm	30 mm
operating range	150 mm	250 mm
maximum range	250 mm	350 mm
angle of beam spread	please see ⓘ	please see ⓘ
transducer frequency	380 kHz	320 kHz
resolution/sampling rate	0.1 mm	0.1 mm
reproducibility	± 0.15 %	± 0.15 %
accuracy	± 1 % (temperature drift internally compensated)	± 1 % (temperature drift internally compensated)
operating voltage U_B	10 V to 30 V DC, reverse polarity protection	10 V to 30 V DC, reverse polarity protection
no-load current consumption	≤ 40 mA	≤ 40 mA
housing	PVDF, PBT;	PVDF, PBT;
	ultrasonic transducer: coated with PTFE film,	ultrasonic transducer: coated with PTFE film,
	FFKM O-ring	FFKM O-ring
class of protection according to EN 60529	IP 67	IP 67
type of connection	5-pin M12 initiator plug	5-pin M12 initiator plug
controls	com input (pin 5)	com input (pin 5)
scope for settings	• Teach-in via com input on pin 5	• Teach-in via com input on pin 5
	• LCA-2 with LinkControl	• LCA-2 with LinkControl
	• IO-Link	• IO-Link
indicators	LED green: working, LED yellow: switch status	LED green: working, LED yellow: switch status
IO-Link	V 1.1	V 1.1
IO-Link SIO mode support	yes	yes
IO-Link min. cycle time	8.4 ms	8.4 ms
Smart Sensor Profile	-	-
operating temperature	-25°C to +70°C	-25°C to +70°C
storage temperature	-40°C to +85°C	-40°C to +85°C
weight	30 g	30 g
switching hysteresis[1]	2 mm	3 mm
switching frequency[1]	25 Hz	25 Hz
response time[1]	32 ms	32 ms
delay prior to availability	< 300 ms	< 300 ms
order number	**pico+15/TF/F**	**pico+25/TF/F**
switching output	Push-Pull, U_B-3 V, -U_B+3 V, I_{max} = 100 mA	Push-Pull, U_B-3 V, -U_B+3 V, I_{max} = 100 mA

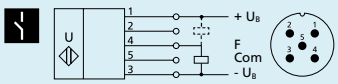

1 Push-Pull switching output

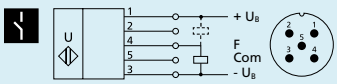

1 Push-Pull switching output

[1] Can be programmed with LinkControl and IO-Link.

pico+35/TF	pico+100/TF	
0.35 m	1.0 m	
70–600 mm	**120–1,300 mm**	

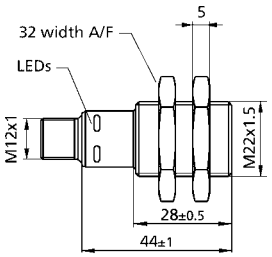

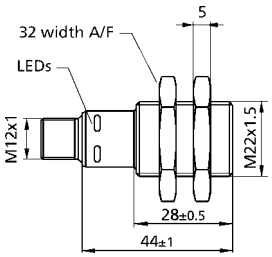

70 mm	120 mm	
350 mm	1,000 mm	
600 mm	1,300 mm	
please see ⓘ	please see ⓘ	
400 kHz	200 kHz	
0.1 mm	0.1 mm	
± 0.15 %	± 0.15 %	
± 1 % (temperature drift internally compensated)	± 1 % (temperature drift internally compensated)	
10 V to 30 V DC, reverse polarity protection	10 V to 30 V DC, reverse polarity protection	
≤ 40 mA	≤ 40 mA	
PVDF, PBT;	PVDF, PBT;	
ultrasonic transducer: coated with PTFE film,	ultrasonic transducer: coated with PTFE film,	
FFKM O-ring	FFKM O-ring	
IP 67	IP 67	
5-pin M12 initiator plug	5-pin M12 initiator plug	
com input (pin 5)	com input (pin 5)	
• Teach-in via com input on pin 5	• Teach-in via com input on pin 5	
• LCA-2 with LinkControl	• LCA-2 with LinkControl	
• IO-Link	• IO-Link	
LED green: working, LED yellow: switch status	LED green: working, LED yellow: switch status	
V 1.1	V 1.1	
yes	yes	
16 ms	20.4 ms	
-	-	
-25°C to +70°C	-25°C to +70°C	
-40°C to +85°C	-40°C to +85°C	
30 g	30 g	
5 mm	20 mm	
12 Hz	10 Hz	
64 ms	80 ms	
< 300 ms	< 300 ms	
pico+35/TF/F	**pico+100/TF/F**	
Push-Pull, U_B-3 V, -U_B+3 V, I_{max} = 100 mA	Push-Pull, U_B-3 V, -U_B+3 V, I_{max} = 100 mA	

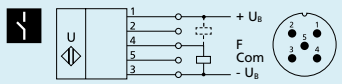

1 Push-Pull switching output

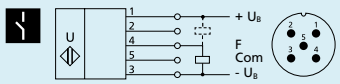

1 Push-Pull switching output

	pico+15/TF	pico+25/TF
	0.15 m	0.25 m
measuring range	**20–250 mm**	**30–350 mm**

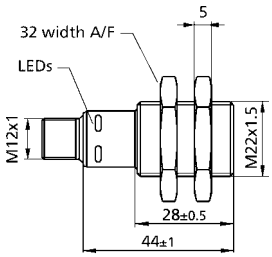

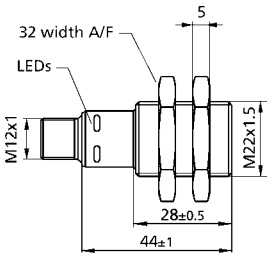

blind zone	20 mm	30 mm
operating range	150 mm	250 mm
maximum range	250 mm	350 mm
angle of beam spread	please see ⓘ	please see ⓘ
transducer frequency	380 kHz	320 kHz
resolution/sampling rate	0.069 mm	0.069 mm to 0.1 mm, depending on the analogue window
reproducibility	± 0.15 %	± 0.15 %
accuracy	± 1 % (temperature drift internally compensated)	± 1 % (temperature drift internally compensated)
operating voltage U_B	10 V to 30 V DC, reverse polarity protection	10 V to 30 V DC, reverse polarity protection
no-load current consumption	≤ 40 mA	≤ 40 mA
housing	PVDF, PBT; ultrasonic transducer: coated with PTFE film, FFKM O-ring, epoxy resin with glass content	brass sleeve, nickel-plated, plastic parts: PBT; ultrasonic transducer: coated with PTFE film, FFKM O-ring, epoxy resin with glass content
class of protection according to EN 60529	IP 67	IP 67
type of connection	5-pin M12 initiator plug	5-pin M12 initiator plug
controls	com input (pin 5)	com input (pin 5)
scope for settings	• Teach-in via com input on pin 5 • LCA-2 with LinkControl	• Teach-in via com input on pin 5 • LCA-2 with LinkControl
indicators	LED green: working, LED yellow: object in the window	LED green: working, LED yellow: object in the window
operating temperature	-25°C to +70°C	-25°C to +70°C
storage temperature	-40°C to +85°C	-40°C to +85°C
weight	30 g	30 g
response time	32 ms	32 ms
delay prior to availability	< 300 ms	< 300 ms
order number analogue output	**pico+15/TF/I** current output 4–20 mA switchable rising/falling	**pico+25/TF/I** current output 4–20 mA switchable rising/falling

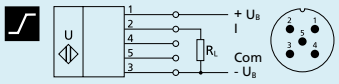

analogue output 4–20 mA

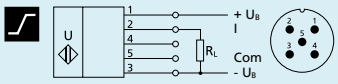

analogue output 4–20 mA

order number analogue output	**pico+15/TF/U** voltage output 0–10 V (at $U_B \geq 15$ V) short-circuit-proof, switchable rising/falling	**pico+25/TF/U** voltage output 0–10 V (at $U_B \geq 15$ V) short-circuit-proof, switchable rising/falling

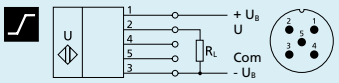

analogue output 0–10 V

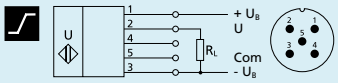

analogue output 0–10 V

pico+35/TF	pico+100/TF	
0.35 m	1.0 m	
70–600 mm	**120–1,300 mm**	

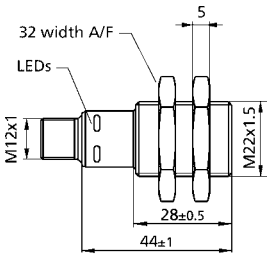

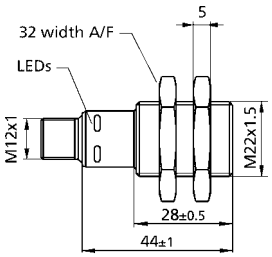

70 mm	120 mm	
350 mm	1,000 mm	
600 mm	1,300 mm	
please see ⓘ	please see ⓘ	
400 kHz	200 kHz	
0.069 mm to 0.17 mm, depending on	0.069 mm to 0.38 mm, depending on	
the analogue window	the analogue window	
± 0.15 %	± 0.15 %	
± 1 % (temperature drift internally compensated)	± 1 % (temperature drift internally compensated)	
10 V to 30 V DC, reverse polarity protection	10 V to 30 V DC, reverse polarity protection	
≤ 40 mA	≤ 40 mA	
brass sleeve, nickel-plated, plastic parts: PBT;	brass sleeve, nickel-plated, plastic parts: PBT;	
ultrasonic transducer: coated with PTFE film, FFKM	ultrasonic transducer: coated with PTFE film, FFKM	
O-ring, epoxy resin with glass content	O-ring, epoxy resin with glass content	
IP 67	IP 67	
5-pin M12 initiator plug	5-pin M12 initiator plug	
com input (pin 5)	com input (pin 5)	
• Teach-in via com input on pin 5	• Teach-in via com input on pin 5	
• LCA-2 with LinkControl	• LCA-2 with LinkControl	
LED green: working, LED yellow: object in the window	LED green: working, LED yellow: object in the window	
-25°C to +70°C	-25°C to +70°C	
-40°C to +85°C	-40°C to +85°C	
30 g	30 g	
64 ms	80 ms	
< 300 ms	< 300 ms	
pico+35/TF/I	**pico+100/TF/I**	
current output 4–20 mA	current output 4–20 mA	
switchable rising/falling	switchable rising/falling	

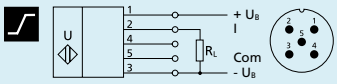

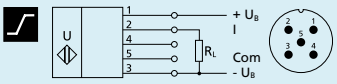

analogue output 4–20 mA

analogue output 4–20 mA

pico+35/TF/U	**pico+100/TF/U**	
voltage output 0–10 V (at $U_B \geq 15$ V)	voltage output 0–10 V (at $U_B \geq 15$ V)	
short-circuit-proof, switchable rising/falling	short-circuit-proof, switchable rising/falling	

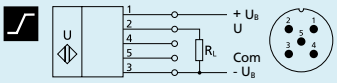

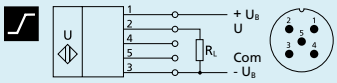

analogue output 0–10 V

analogue output 0–10 V

crm+

Wear-resistant PEEK film protects the sensor membrane from chemicals, contamination and caking.

HIGHLIGHTS

- Ultrasonic transducer protected by PEEK film › for simple cleaning and high resistance to wear
- Stainless-steel housing
- Digital display with direct measured value output in mm/cm or %
- Numeric configuration of the sensor using digital display › permits the complete advance configuration of the sensor
- Automatic synchronisation and multiplex operation › for simultaneous operation of up to ten sensors in close quarters

BASICS

- 1 or 2 switching outputs in pnp variant
- Analogue output 4–20 mA and 0–10 V › with automatic switching between current and voltage outputs
- 5 detection ranges with a measurement range of 30 mm to 8 m
- microsonic Teach-in by using button T1 or T2
- 0.025 mm to 2.4 mm resolution
- Temperature compensation
- 9–30 V operating voltage
- LinkControl › for configuration of sensors from a PC

TouchControl with LED display

Wear-resistant PEEK protective film

Sensor membrane with wear-resistant protective film

In many filling processes, spray on the sensor membrane simply cannot be avoided.

These sprays often harden so that after longer periods of operation contamination can only be removed from the sensor membrane by mechanical means.

The new protective film of the crm+ sensors now makes it easy to remove caked-on soiling, such as hardened casting compound and cement spatter. The protective film is also highly resistant to corrosive media. The threaded sleeve is made of 1.4571 stainless steel.

There are three output stages available

for all five detection ranges:

- 1 switching output in pnp switching technology
- 2 switching outputs in pnp switching technology
- 1 analogue output 4–20 mA and 0–10 V

The crm+ sensors with switching output have three operating modes:

- Single switching point
- Two-way reflective barrier
- Window mode

With TouchControl

all configuration can be done right at the sensor. The easily legible three-digit LED display continually shows the current distance value and automatically switches between millimetre and centimetre displays.

Setting a switching or analogue output

can optionally be carried out by numeric input of the desired distance values, or using a Teach-in procedure. This permits the user to select the configuration method preferred. The crm+ sensors support synchronisation and multiplex operation and have extensive parameterisation options via LinkControl.

For detailed information, please see the chapter “mic+”.

LinkControl

consists of the LinkControl adapter and the LinkControl software and facilitates the configuration of the crm+ sensors via a PC or laptop with any conventional Windows® operating system.

Sensor connected to the PC via LCA-2 for programming

	crm+25	crm+35
	0.25 m	0.35 m
measuring range	**30 – 350 mm**	**85 – 600 mm**

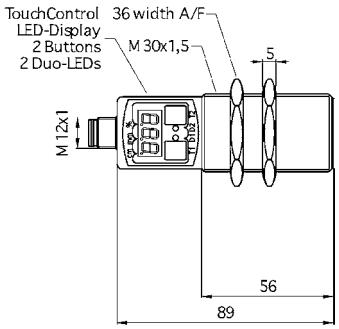

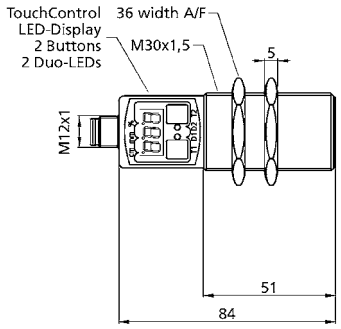

	crm+25	crm+35
blind zone	30 mm	85 mm
operating range	250 mm	350 mm
maximum range	350 mm	600 mm
angle of beam spread	please see ⓘ	please see ⓘ
transducer frequency	320 kHz	360 kHz
resolution/sampling rate	0.025 mm	0.025 mm
reproducibility	± 0.15 %	± 0.15 %
accuracy	± 1 % (temperature drift internally compensated)	± 1 % (temperature drift internally compensated)
operating voltage U_B	9 V to 30 V DC, reverse polarity protection	9 V to 30 V DC, reverse polarity protection
no-load current consumption	≤ 80 mA	≤ 80 mA
housing	stainless steel 1.4571, plastic parts: PBT, TPU; ultrasonic transducer: coated with PEEK film, PTFE O-ring	stainless steel 1.4571, plastic parts: PBT, TPU; ultrasonic transducer: coated with PEEK film, PTFE O-ring
class of protection according to EN 60529	IP 67	IP 67
type of connection	5-pin M12 initiator plug	5-pin M12 initiator plug
controls	TouchControl	TouchControl
scope for settings	• numeric configuration and Teach-in • LCA-2 with LinkControl	• numeric configuration and Teach-in • LCA-2 with LinkControl
indicators	3-digit LED display, 2 three-colour LEDs	3-digit LED display, 2 three-colour LEDs
operating temperature	-25°C to +70°C	-25°C to +70°C
storage temperature	-40°C to +85°C	-40°C to +85°C
weight	150 g	150 g
switching hysteresis[1]	3 mm	5 mm
switching frequency[1]	25 Hz	12 Hz
response time[1]	32 ms	64 ms
delay prior to availability	< 300 ms	< 300 ms
order number	**crm+25/D/TC/E**	**crm+35/D/TC/E**
switching output	pnp, U_B-2 V, I_{max} = 200 mA NOC/NCC adjustable, short-circuit-proof	pnp, U_B-2 V, I_{max} = 200 mA NOC/NCC adjustable, short-circuit-proof

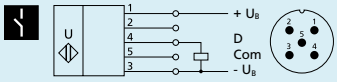

1 pnp switching output

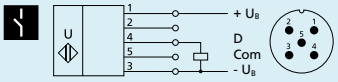

1 pnp switching output

[1] Can be programmed with TouchControl and LinkControl.

crm+130

1.3 m

200 – 2,000 mm

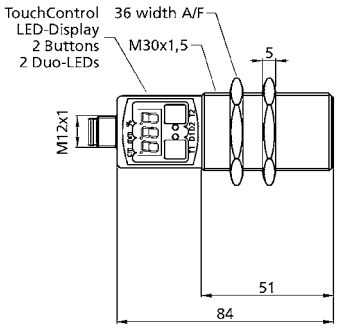

crm+340

3.4 m

350 – 5,000 mm

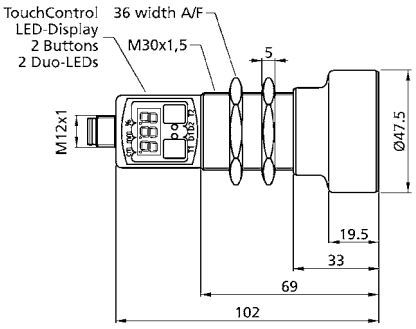

crm+600

6.0 m

600 – 8,000 mm

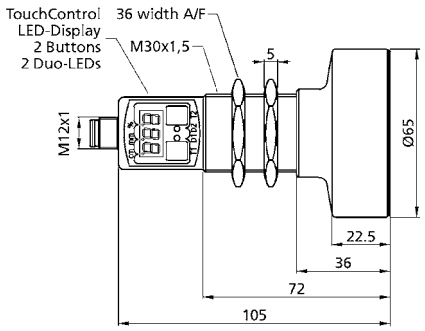

200 mm	350 mm	600 mm
1,300 mm	3,400 mm	6,000 mm
2,000 mm	5,000 mm	8,000 mm
please see ⓘ	please see ⓘ	please see ⓘ
200 kHz	120 kHz	80 kHz
0.18 mm	0.18 mm	0.18 mm
± 0.15 %	± 0.15 %	± 0.15 %
± 1 % (temperature drift internally compensated)	± 1 % (temperature drift internally compensated)	± 1 % (temperature drift internally compensated)
9 V to 30 V DC, reverse polarity protection	9 V to 30 V DC, reverse polarity protection	9 V to 30 V DC, reverse polarity protection
≤ 80 mA	≤ 80 mA	≤ 80 mA
stainless steel 1.4571, plastic parts: PBT, TPU;	stainless steel 1.4571, plastic parts: PBT, TPU;	stainless steel 1.4571, plastic parts: PBT, TPU;
ultrasonic transducer: coated with PEEK film,	ultrasonic transducer: coated with PEEK film,	ultrasonic transducer: coated with PEEK film,
PTFE O-ring	PTFE O-ring	PTFE O-ring
IP 67	IP 67	IP 67
5-pin M12 initiator plug	5-pin M12 initiator plug	5-pin M12 initiator plug
TouchControl	TouchControl	TouchControl
• numeric configuration and Teach-in	• numeric configuration and Teach-in	• numeric configuration and Teach-in
• LCA-2 with LinkControl	• LCA-2 with LinkControl	• LCA-2 with LinkControl
3-digit LED display, 2 three-colour LEDs	3-digit LED display, 2 three-colour LEDs	3-digit LED display, 2 three-colour LEDs
-25°C to +70°C	-25°C to +70°C	-25°C to +70°C
-40°C to +85°C	-40°C to +85°C	-40°C to +85°C
150 g	210 g	270 g
20 mm	50 mm	100 mm
8 Hz	4 Hz	3 Hz
92 ms	172 ms	240 ms
< 300 ms	< 380 ms	< 450 ms
crm+130/D/TC/E	**crm+340/D/TC/E**	**crm+600/D/TC/E**
pnp, U_B-2 V, I_{max} = 200 mA	pnp, U_B-2 V, I_{max} = 200 mA	pnp, U_B-2 V, I_{max} = 200 mA
NOC/NCC adjustable, short-circuit-proof	NOC/NCC adjustable, short-circuit-proof	NOC/NCC adjustable, short-circuit-proof

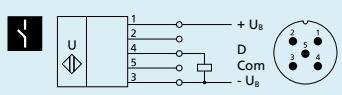

1 pnp switching output

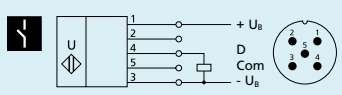

1 pnp switching output

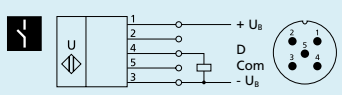

1 pnp switching output

	crm+25	crm+35
	0.25 m	0.35 m
measuring range	**30–350 mm**	**85–600 mm**

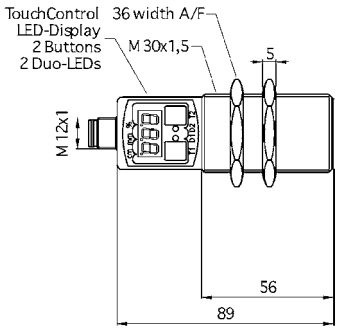

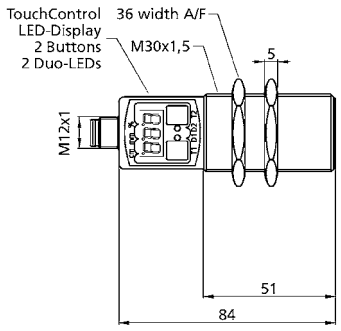

blind zone	30 mm	85 mm
operating range	250 mm	350 mm
maximum range	350 mm	600 mm
angle of beam spread	please see ⓘ	please see ⓘ
transducer frequency	320 kHz	360 kHz
resolution/sampling rate	0.025 mm	0.025 mm
reproducibility	± 0.15 %	± 0.15 %
accuracy	± 1 % (temperature drift internally compensated)	± 1 % (temperature drift internally compensated)
operating voltage U_B	9 V to 30 V DC, reverse polarity protection	9 V to 30 V DC, reverse polarity protection
no-load current consumption	≤ 80 mA	≤ 80 mA
housing	stainless steel 1.4571, plastic parts: PBT, TPU; ultrasonic transducer: coated with PEEK film, PTFE O-ring	stainless steel 1.4571, plastic parts: PBT, TPU; ultrasonic transducer: coated with PEEK film, PTFE O-ring
class of protection according to EN 60529	IP 67	IP 67
type of connection	5-pin M12 initiator plug	5-pin M12 initiator plug
controls	TouchControl	TouchControl
scope for settings	• numeric configuration and Teach-in • LCA-2 with LinkControl	• numeric configuration and Teach-in • LCA-2 with LinkControl
indicators	3-digit LED display, 2 three-colour LEDs	3-digit LED display, 2 three-colour LEDs
operating temperature	-25°C to +70°C	-25°C to +70°C
storage temperature	-40°C to +85°C	-40°C to +85°C
weight	150 g	150 g
switching hysteresis[1]	3 mm	5 mm
switching frequency[1]	25 Hz	12 Hz
response time[1]	32 ms	64 ms
delay prior to availability	< 300 ms	< 300 ms
order number	**crm+25/DD/TC/E**	**crm+35/DD/TC/E**
switching outputs	2 x pnp, U_B-2 V, I_{max} = 2 x 200 mA NOC/NCC adjustable, short-circuit-proof	2 x pnp, U_B-2 V, I_{max} = 2 x 200 mA NOC/NCC adjustable, short-circuit-proof

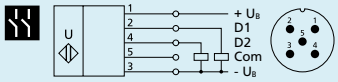

2 pnp switching outputs

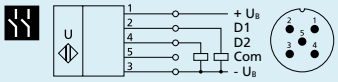

2 pnp switching outputs

[1] Can be programmed with TouchControl and LinkControl.

crm+130

1.3 m

200 – 2,000 mm

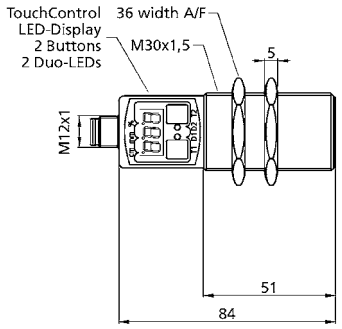

crm+340

3.4 m

350 – 5,000 mm

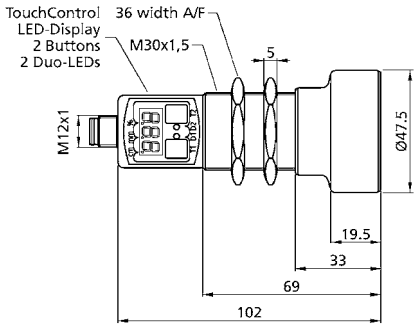

crm+600

6.0 m

600 – 8,000 mm

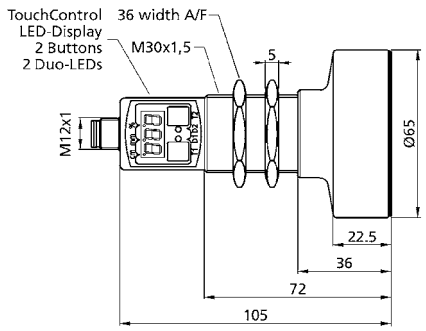

200 mm	350 mm	600 mm
1,300 mm	3,400 mm	6,000 mm
2,000 mm	5,000 mm	8,000 mm
please see ⓘ	please see ⓘ	please see ⓘ
200 kHz	120 kHz	80 kHz
0.18 mm	0.18 mm	0.18 mm
± 0.15 %	± 0.15 %	± 0.15 %
± 1 % (temperature drift internally compensated)	± 1 % (temperature drift internally compensated)	± 1 % (temperature drift internally compensated)
9 V to 30 V DC, reverse polarity protection	9 V to 30 V DC, reverse polarity protection	9 V to 30 V DC, reverse polarity protection
≤ 80 mA	≤ 80 mA	≤ 80 mA
stainless steel 1.4571, plastic parts: PBT, TPU;	stainless steel 1.4571, plastic parts: PBT, TPU;	stainless steel 1.4571, plastic parts: PBT, TPU;
ultrasonic transducer: coated with PEEK film,	ultrasonic transducer: coated with PEEK film,	ultrasonic transducer: coated with PEEK film,
PTFE O-ring	PTFE O-ring	PTFE O-ring
IP 67	IP 67	IP 67
5-pin M12 initiator plug	5-pin M12 initiator plug	5-pin M12 initiator plug
TouchControl	TouchControl	TouchControl
• numeric configuration and Teach-in	• numeric configuration and Teach-in	• numeric configuration and Teach-in
• LCA-2 with LinkControl	• LCA-2 with LinkControl	• LCA-2 with LinkControl
3-digit LED display, 2 three-colour LEDs	3-digit LED display, 2 three-colour LEDs	3-digit LED display, 2 three-colour LEDs
-25°C to +70°C	-25°C to +70°C	-25°C to +70°C
-40°C to +85°C	-40°C to +85°C	-40°C to +85°C
150 g	210 g	270 g
20 mm	50 mm	100 mm
8 Hz	4 Hz	3 Hz
92 ms	172 ms	240 ms
< 300 ms	< 380 ms	< 450 ms
crm+130/DD/TC/E	**crm+340/DD/TC/E**	**crm+600/DD/TC/E**
2 x pnp, U_B-2 V, I_{max} = 2 x 200 mA	2 x pnp, U_B-2 V, I_{max} = 2 x 200 mA	2 x pnp, U_B-2 V, I_{max} = 2 x 200 mA
NOC/NCC adjustable, short-circuit-proof	NOC/NCC adjustable, short-circuit-proof	NOC/NCC adjustable, short-circuit-proof

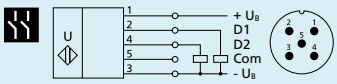

2 pnp switching outputs

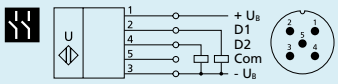

2 pnp switching outputs

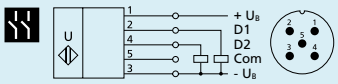

2 pnp switching outputs

	crm+25	crm+35
	0.25 m	0.35 m
measuring range	**30–350 mm**	**85–600 mm**

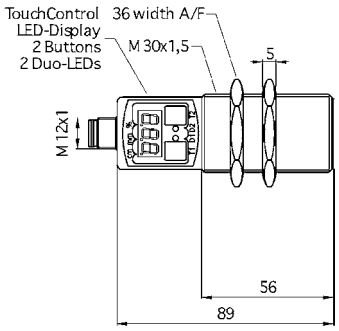

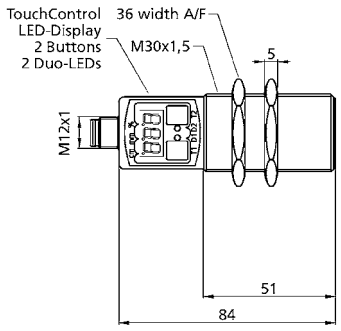

blind zone	30 mm	85 mm
operating range	250 mm	350 mm
maximum range	350 mm	600 mm
angle of beam spread	please see ⓘ	please see ⓘ
transducer frequency	320 kHz	360 kHz
resolution/sampling rate	0.025 mm to 0.10 mm, depending on the analogue window	0.025 mm to 0.16 mm, depending on the analogue window
reproducibility	± 0.15 %	± 0.15 %
accuracy	± 1 % (temperature drift internally compensated)	± 1 % (temperature drift internally compensated)
operating voltage U_B	9 V to 30 V DC, reverse polarity protection	9 V to 30 V DC, reverse polarity protection
no-load current consumption	≤ 80 mA	≤ 80 mA
housing	stainless steel 1.4571, plastic parts: PBT, TPU; ultrasonic transducer: coated with PEEK film, PTFE O-ring	stainless steel 1.4571, plastic parts: PBT, TPU; ultrasonic transducer: coated with PEEK film, PTFE O-ring
class of protection according to EN 60529	IP 67	IP 67
type of connection	5-pin M12 initiator plug	5-pin M12 initiator plug
controls	TouchControl	TouchControl
scope for settings	• numeric configuration and Teach-in • LCA-2 with LinkControl	• numeric configuration and Teach-in • LCA-2 with LinkControl
indicators	3-digit LED display, 2 three-colour LEDs	3-digit LED display, 2 three-colour LEDs
operating temperature	-25°C to +70°C	-25°C to +70°C
storage temperature	-40°C to +85°C	-40°C to +85°C
weight	150 g	150 g
response time[1]	32 ms	64 ms
delay prior to availability	< 300 ms	< 300 ms
order number	**crm+25/IU/TC/E**	**crm+35/IU/TC/E**
analogue output	current output 4–20 mA voltage output 0–10 V (at $U_B \geq 15$ V), short-circuit-proof switchable rising/falling	current output 4–20 mA voltage output 0–10 V (at $U_B \geq 15$ V), short-circuit-proof switchable rising/falling

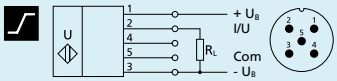

analogue output

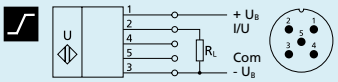

analogue output

[1] Can be programmed with TouchControl and LinkControl.

crm+130

1.3 m

200 – 2,000 mm

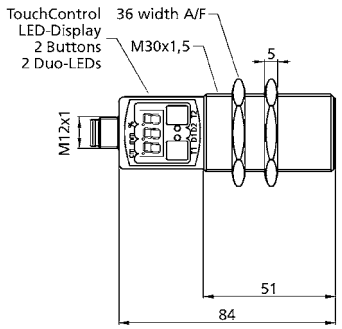

crm+340

3.4 m

350 – 5,000 mm

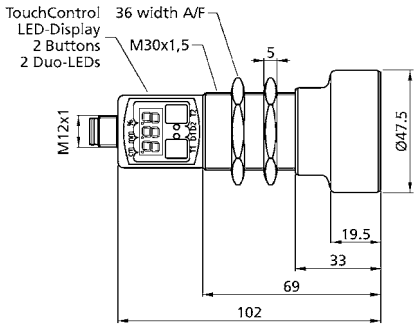

crm+600

6.0 m

600 – 8,000 mm

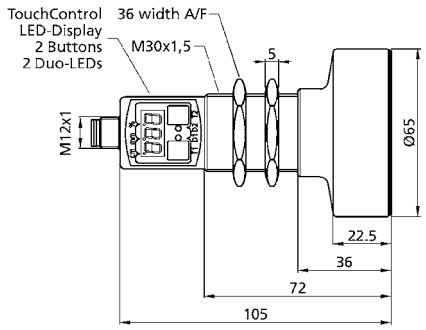

200 mm	350 mm	600 mm
1,300 mm	3,400 mm	6,000 mm
2,000 mm	5,000 mm	8,000 mm
please see ⓘ	please see ⓘ	please see ⓘ
200 kHz	120 kHz	80 kHz
0.18 mm to 0.57 mm, depending on the analogue window	0.18 mm to 1.5 mm, depending on the analogue window	0.18 mm to 2.4 mm, depending on the analogue window
± 0.15 %	± 0.15 %	± 0.15 %
± 1 % (temperature drift internally compensated)	± 1 % (temperature drift internally compensated)	± 1 % (temperature drift internally compensated)
9 V to 30 V DC, reverse polarity protection	9 V to 30 V DC, reverse polarity protection	9 V to 30 V DC, reverse polarity protection
≤ 80 mA	≤ 80 mA	≤ 80 mA
stainless steel 1.4571, plastic parts: PBT, TPU; ultrasonic transducer: coated with PEEK film, PTFE O-ring	stainless steel 1.4571, plastic parts: PBT, TPU; ultrasonic transducer: coated with PEEK film, PTFE O-ring	stainless steel 1.4571, plastic parts: PBT, TPU; ultrasonic transducer: coated with PEEK film, PTFE O-ring
IP 67	IP 67	IP 67
5-pin M12 initiator plug	5-pin M12 initiator plug	5-pin M12 initiator plug
TouchControl	TouchControl	TouchControl
• numeric configuration and Teach-in	• numeric configuration and Teach-in	• numeric configuration and Teach-in
• LCA-2 with LinkControl	• LCA-2 with LinkControl	• LCA-2 with LinkControl
3-digit LED display, 2 three-colour LEDs	3-digit LED display, 2 three-colour LEDs	3-digit LED display, 2 three-colour LEDs
-25°C to +70°C	-25°C to +70°C	-25°C to +70°C
-40°C to +85°C	-40°C to +85°C	-40°C to +85°C
150 g	210 g	270 g
92 ms	172 ms	240 ms
< 300 ms	< 450 ms	< 450 ms
crm+130/IU/TC/E	**crm+340/IU/TC/E**	**crm+600/IU/TC/E**
current output 4 – 20 mA	current output 4 – 20 mA	current output 4 – 20 mA
voltage output 0 – 10 V (at $U_B \geq 15$ V),	voltage output 0 – 10 V (at $U_B \geq 15$ V),	voltage output 0 – 10 V (at $U_B \geq 15$ V),
short-circuit-proof	short-circuit-proof	short-circuit-proof
switchable rising/falling	switchable rising/falling	switchable rising/falling

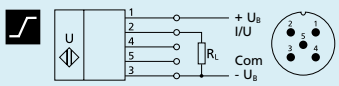

analogue output

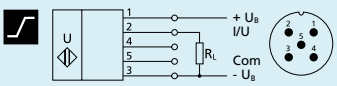

analogue output

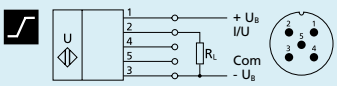

analogue output

hps+

In protective housing – When you need chemical- and pressure-resistant sensors.

HIGHLIGHTS

- Optionally used in normal pressure or overpressure
- Teflon membrane › for protection against aggressive media
- Stainless-steel or optional PVDF housing for hps+340 › for use in the food industry
- Sealed against the housing with an O-ring made from FFKM › for the highest possible chemical resistance
- Digital display with direct measured value output in mm/cm or %
- Numeric configuration of the sensor using digital display

BASICS

- 2 switching outputs in pnp variant
- Analogue output plus 1 pnp switching output
- 4 detection ranges with a measurement range of 30 mm to 8 m
- microsonic Teach-in by using button T1 or T2
- 0.025 mm to 2.4 mm resolution
- Temperature compensation
- 9–30 V operating voltage
- LinkControl › for configuration of sensors from a PC

Fill level measurement in tanks

For fill level measurements of aggressive media and in overpressure

the ultrasonic transducers of the hps+ sensors are fitted out – as standard – with a Teflon film. It is sealed with a FFKM O-ring against the housing made of 1.4571 stainless steel or PVDF. This ensures a high degree of resistance to aggressive media.

The hps+ sensors can be used for fill level measurement under normal pressure or in tanks and containers with an overpressure of up to 6 bar. Its special software filters also allow its use in containers filled from above or that have a stirring system. Pressure-tight installation in a tank is undertaken by means of a 1" threaded flange or a 2" one in the case of hps+340.

Chemical resistance

and seal tightness were tested through being stored over cellulose thinner and 1,000,000 alternating pressure stresses. Cellulose thinner is extremely corrosive and has a high rate of penetration.

hps+340 in highly resistant PVDF housing

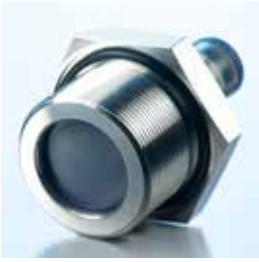

PTFE protective film sealed with an O-ring made from FFKM against the housing

Two different output stages

are available for four detection ranges:

- 2 switching outputs, in pnp switching technology
- 1 pnp switching output with an additional analogue output

The hps+ sensors with switching output have three operating modes:

- Single switching point
- Two-way reflective barrier
- Window mode

Two three-colour LEDs

always show the current state of the switching outputs or the analogue output.

With TouchControl

all configuration can be done right at the sensor. The easily legible three-digit LED display continually shows the current distance value and automatically switches between millimetre and centimetre displays.

Setting a switching or analogue output

can optionally be carried out by numeric input of the desired distance values, or using a Teach-in procedure. This permits the user to select the configuration method preferred.

The hps+ sensors support synchronisation and multiplex operation and have extensive parameterisation options via LinkControl.

Further information on how to set up hps+ sensors can be found in the chapter "mic+".

LinkControl

consists of the LinkControl adapter and the LinkControl software and facilitates the configuration of the hps+ sensors via a PC or laptop with any conventional Windows® operating system.

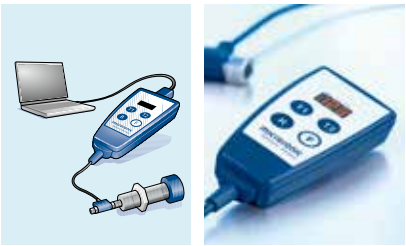

Sensor connected to the PC via LCA-2 for programming

	hps+25	hps+35
	0.25 m	0.35 m
measuring range	**30 – 990 mm**	**85 – 1,500 mm**

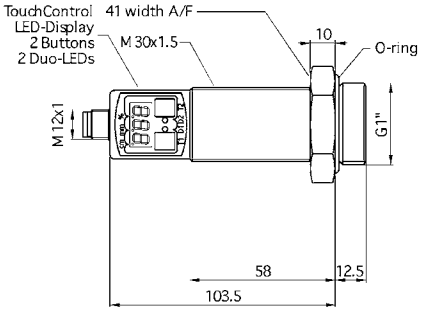

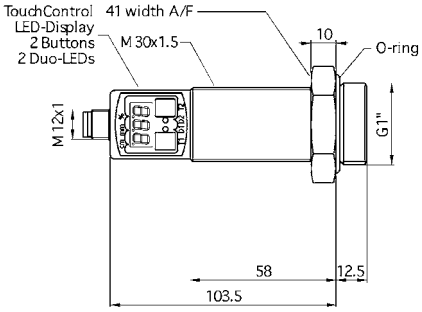

blind zone	30 mm	85 mm
operating range	250 mm	350 mm
maximum range @ normal pressure	350 mm	600 mm
maximum range @ ≥ 2 bar overpressure	990 mm	1,500 mm
angle of beam spread	please see ⓘ	please see ⓘ
transducer frequency	320 kHz	320 kHz
resolution/sampling rate	0.025 mm	0.18 mm
reproducibility	± 0.15 %	± 0.15 %
accuracy	± 1 % (temperature drift internally compensated)	± 1 % (temperature drift internally compensated)
operating voltage U_B	9 V to 30 V DC, reverse polarity protection	9 V to 30 V DC, reverse polarity protection
no-load current consumption	≤ 80 mA	≤ 80 mA
housing	stainless steel 1.4571, plastic parts: PBT, TPU; ultrasonic transducer: coated with PTFE film, FFKM O-ring	stainless steel 1.4571, plastic parts: PBT, TPU; ultrasonic transducer: coated with PTFE film, FFKM O-ring
process connection	G1	G1
class of protection according to EN 60529	IP 67	IP 67
type of connection	5-pin M12 initiator plug	5-pin M12 initiator plug
controls	TouchControl	TouchControl
scope for settings	• numeric configuration and Teach-in • LCA-2 with LinkControl	• numeric configuration and Teach-in • LCA-2 with LinkControl
indicators	3-digit LED display, 2 three-colour LEDs	3-digit LED display, 2 three-colour LEDs
operating pressure	up to 6.0 bar overpressure	up to 6.0 bar overpressure
operating temperature	-25°C to +70°C	-25°C to +70°C
storage temperature	-40°C to +85°C	-40°C to +85°C
weight	210 g	210 g
switching hysteresis[1]	3 mm	5 mm
switching frequency[1]	11 Hz	9 Hz
response time[1]	68 ms	84 ms
delay prior to availability	< 300 ms	< 300 ms
order number	**hps+25/DD/TC/E/G1**	**hps+35/DD/TC/E/G1**
switching outputs	2 x pnp, U_B-2 V, I_{max} = 2 x 200 mA NOC/NCC adjustable, short-circuit-proof	2 x pnp, U_B-2 V, I_{max} = 2 x 200 mA NOC/NCC adjustable, short-circuit-proof

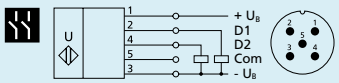

2 pnp switching outputs

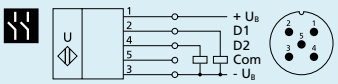

2 pnp switching outputs

[1] Can be programmed with TouchControl and LinkControl.

hps+130

1.3 m

200–5,000 mm

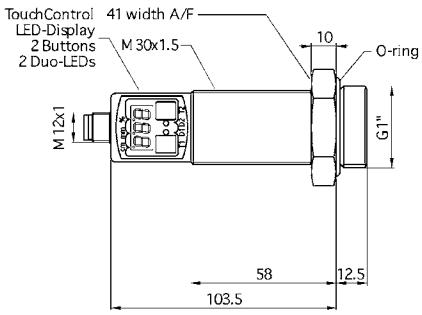

hps+340

3.4 m

350–8,000 mm

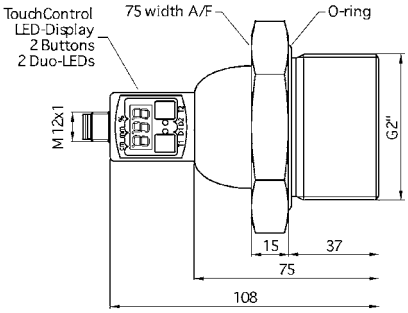

hps+340

3.4 m

350–8,000 mm

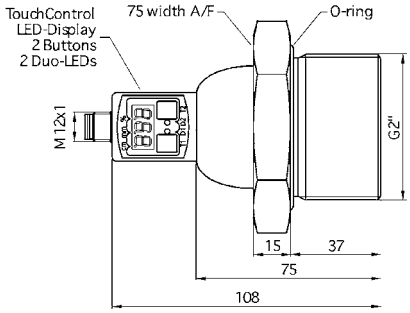

200 mm	350 mm	350 mm
1,300 mm	3,400 mm	3,400 mm
2,000 mm	5,000 mm	5,000 mm
5,000 mm	8,000 mm	8,000 mm
please see ⓘ	please see ⓘ	please see ⓘ
180 kHz	120 kHz	120 kHz
0.18 mm	0.18 mm	0.18 mm
± 0.15 %	± 0.15 %	± 0.15 %
± 1 % (temperature drift internally compensated)	± 1 % (temperature drift internally compensated)	± 1 % (temperature drift internally compensated)
9 V to 30 V DC, reverse polarity protection	9 V to 30 V DC, reverse polarity protection	9 V to 30 V DC, reverse polarity protection
≤ 80 mA	≤ 80 mA	≤ 80 mA
stainless steel 1.4571, plastic parts: PBT, TPU;	stainless steel 1.4571, plastic parts: PBT, TPU;	PVDF, PBT, TPU;
ultrasonic transducer: coated with PTFE film,	ultrasonic transducer: coated with PTFE film,	ultrasonic transducer: coated with PTFE film,
FFKM O-ring	FFKM O-ring	FFKM O-ring
G1	G2	G2
IP 67	IP 67	IP 67
5-pin M12 initiator plug	5-pin M12 initiator plug	5-pin M12 initiator plug
TouchControl	TouchControl	TouchControl
• numeric configuration and Teach-in	• numeric configuration and Teach-in	• numeric configuration and Teach-in
• LCA-2 with LinkControl	• LCA-2 with LinkControl	• LCA-2 with LinkControl
3-digit LED display, 2 three-colour LEDs	3-digit LED display, 2 three-colour LEDs	3-digit LED display, 2 three-colour LEDs
up to 6.0 bar overpressure	up to 6.0 bar overpressure	up to 6.0 bar overpressure
-25°C to +70°C	-25°C to +70°C	-25°C to +70°C
-40°C to +85°C	-40°C to +85°C	-40°C to +85°C
210 g	1,200 g	350 g
20 mm	50 mm	50 mm
5 Hz	3 Hz	3 Hz
160 ms	240 ms	240 ms
< 300 ms	< 380 ms	< 380 ms
hps+130/DD/TC/E/G1	**hps+340/DD/TC/E/G2**	**hps+340/DD/TC/G2**
2 x pnp, U_B-2 V, I_{max} = 2 x 200 mA	2 x pnp, U_B-2 V, I_{max} = 2 x 200 mA	2 x pnp, U_B-2 V, I_{max} = 2 x 200 mA
NOC/NCC adjustable, short-circuit-proof	NOC/NCC adjustable, short-circuit-proof	NOC/NCC adjustable, short-circuit-proof

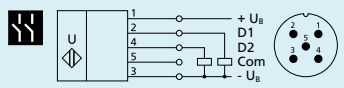

2 pnp switching outputs

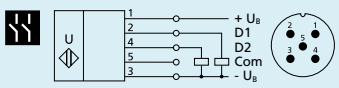

2 pnp switching outputs

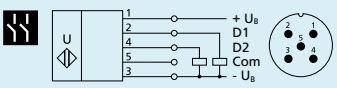

2 pnp switching outputs

	hps+25	hps+35
	0.25 m	0.35 m
measuring range	**30 – 990 mm**	**85 – 1,500 mm**

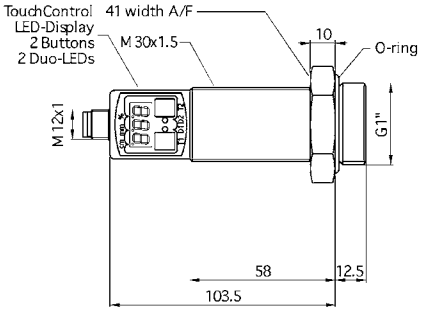

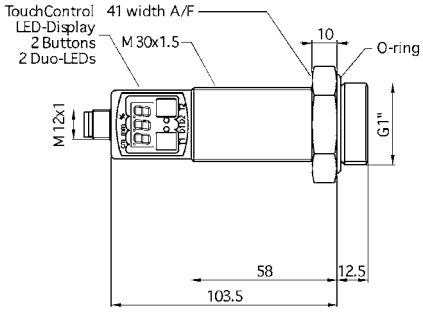

blind zone	30 mm	85 mm
operating range	250 mm	350 mm
maximum range @ normal pressure	350 mm	600 mm
maximum range @ ≥ 2 bar overpressure	990 mm	1,500 mm
angle of beam spread	please see ⓘ	please see ⓘ
transducer frequency	320 kHz	320 kHz
resolution/sampling rate	0.025 mm to 0.30 mm, depending on the analogue window	0.18 mm to 0.45 mm, depending on the analogue window
reproducibility	± 0.15 %	± 0.15 %
accuracy	± 1 % (temperature drift internally compensated)	± 1 % (temperature drift internally compensated)
operating voltage U_B	9 V to 30 V DC, reverse polarity protection	9 V to 30 V DC, reverse polarity protection
no-load current consumption	≤ 80 mA	≤ 80 mA
housing	stainless steel 1.4571, plastic parts: PBT, TPU; ultrasonic transducer: coated with PTFE film, FFKM O-ring	stainless steel 1.4571, plastic parts: PBT, TPU; ultrasonic transducer: coated with PTFE film, FFKM O-ring
process connection	G1	G1
class of protection according to EN 60529	IP 67	IP 67
type of connection	5-pin M12 initiator plug	5-pin M12 initiator plug
controls	TouchControl	TouchControl
scope for settings	• numeric configuration and Teach-in • LCA-2 with LinkControl	• numeric configuration and Teach-in • LCA-2 with LinkControl
indicators	3-digit LED display, 2 three-colour LEDs	3-digit LED display, 2 three-colour LEDs
operating pressure	up to 6.0 bar overpressure	up to 6.0 bar overpressure
operating temperature	-25°C to +70°C	-25°C to +70°C
storage temperature	-40°C to +85°C	-40°C to +85°C
weight	210 g	210 g
switching hysteresis[1]	3 mm	5 mm
switching frequency[1]	11 Hz	9 Hz
response time[1]	68 ms	84 ms
delay prior to availability	< 300 ms	< 300 ms
order number	**hps+25/DIU/TC/E/G1**	**hps+35/DIU/TC/E/G1**
switching output	pnp, U_B-2 V, I_{max} = 200 mA NOC/NCC adjustable, short-circuit-proof	pnp, U_B-2 V, I_{max} = 200 mA NOC/NCC adjustable, short-circuit-proof
analogue output	current output 4 – 20 mA voltage output 0 – 10 V (at U_B ≥ 15 V), short-circuit-proof switchable rising/falling	current output 4 – 20 mA voltage output 0 – 10 V (at U_B ≥ 15 V), short-circuit-proof switchable rising/falling

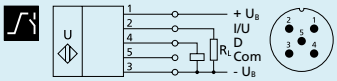

1 pnp switching output + analogue output

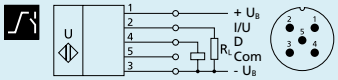

1 pnp switching output + analogue output

[1] Can be programmed with TouchControl and LinkControl.

hps+130

1.3 m

200 – 5,000 mm

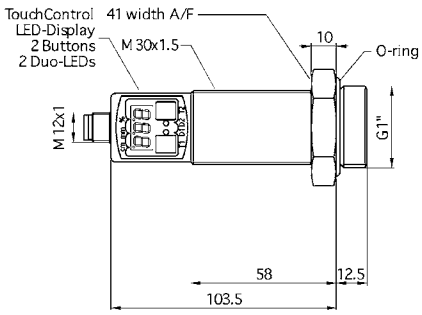

200 mm
1,300 mm
2,000 mm
5,000 mm
please see ⓘ
180 kHz
0.18 mm to 1.5 mm, depending on
the analogue window
± 0.15 %
± 1 % (temperature drift internally compensated)
9 V to 30 V DC, reverse polarity protection
≤ 80 mA
stainless steel 1.4571, plastic parts: PBT, TPU;
ultrasonic transducer: coated with PTFE film,
FFKM O-ring
G1
IP 67
5-pin M12 initiator plug
TouchControl
• numeric configuration and Teach-in
• LCA-2 with LinkControl
3-digit LED display, 2 three-colour LEDs
up to 6.0 bar overpressure
-25°C to +70°C
-40°C to +85°C
210 g
20 mm
5 Hz
160 ms
< 300 ms
hps+130/DIU/TC/E/G1
pnp, U_B-2 V, I_{max} = 200 mA
NOC/NCC adjustable, short-circuit-proof
current output 4 – 20 mA
voltage output 0 – 10 V (at $U_B \geq 15$ V),
short-circuit-proof
switchable rising/falling

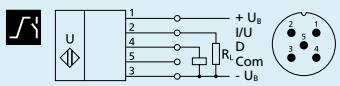

1 pnp switching output + analogue output

hps+340

3.4 m

350 – 8,000 mm

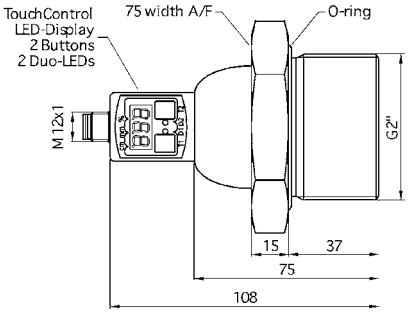

350 mm
3,400 mm
5,000 mm
8,000 mm
please see ⓘ
120 kHz
0.18 mm to 2.4 mm, depending on
the analogue window
± 0.15 %
± 1 % (temperature drift internally compensated)
9 V to 30 V DC, reverse polarity protection
≤ 80 mA
stainless steel 1.4571, plastic parts: PBT, TPU;
ultrasonic transducer: coated with PTFE film,
FFKM O-ring
G2
IP 67
5-pin M12 initiator plug
TouchControl
• numeric configuration and Teach-in
• LCA-2 with LinkControl
3-digit LED display, 2 three-colour LEDs
up to 6.0 bar overpressure
-25°C to +70°C
-40°C to +85°C
1,200 g
50 mm
3 Hz
240 ms
< 450 ms
hps+340/DIU/TC/E/G2
pnp, U_B-2 V, I_{max} = 200 mA
NOC/NCC adjustable, short-circuit-proof
current output 4 – 20 mA
voltage output 0 – 10 V (at $U_B \geq 15$ V),
short-circuit-proof
switchable rising/falling

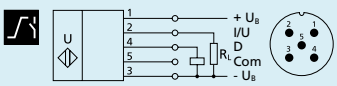

1 pnp switching output + analogue output

hps+340

3.4 m

350 – 8,000 mm

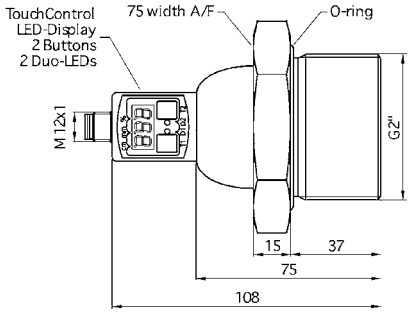

350 mm
3,400 mm
5,000 mm
8,000 mm
please see ⓘ
120 kHz
0.18 mm to 2.4 mm, depending on
the analogue window
± 0.15 %
± 1 % (temperature drift internally compensated)
9 V to 30 V DC, reverse polarity protection
≤ 80 mA
PVDF, PBT, TPU;
ultrasonic transducer: coated with PTFE film,
FFKM O-ring
G2
IP 67
5-pin M12 initiator plug
TouchControl
• numeric configuration and Teach-in
• LCA-2 with LinkControl
3-digit LED display, 2 three-colour LEDs
up to 6.0 bar overpressure
-25°C to +70°C
-40°C to +85°C
350 g
50 mm
3 Hz
240 ms
< 450 ms
hps+340/DIU/TC/G2
pnp, U_B-2 V, I_{max} = 200 mA
NOC/NCC adjustable, short-circuit-proof
current output 4 – 20 mA
voltage output 0 – 10 V (at $U_B \geq 15$ V),
short-circuit-proof
switchable rising/falling

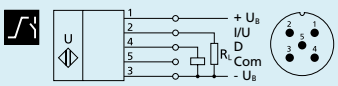

1 pnp switching output + analogue output

wms

The wms sensors are designed for use in microprocessor controllers with signal evaluation performed by customers.

HIGHLIGHTS

› Trigger input › for control of the ultrasonic transmitter

› Echo output › for customer-provided evaluation in the controller

BASICS

› 1 echo output › with a load up to 10 mA

› 5 detection ranges with a measurement range of 30 mm to 8 m

› 0.36 mm resolution

› 9–30 V operating voltage

The wms sensors

require a connection to the customer's own control and signal evaluation equipment.

wms – the inexpensive alternative

to a self-contained sensor when the sensor must be controlled by the customer's system. A microprocessor control is normally required for this.

The "transmitter" signal input

briefly has to be set to $-U_B$ by the control unit via an open-collector circuit. As a result, the wms sensor emits a sound pulse for the time of this signal.

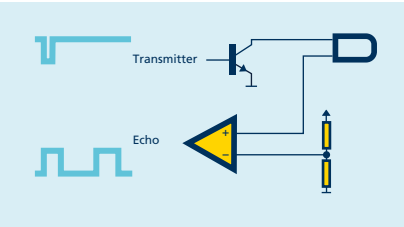

Triggering a wms sensor from the customer's control system

The "echo" signal output

subsequently transmits all echo signals received depending on their duration as 1 bit values (echo yes/no). This takes between 8 and 65 ms depending on the type of sensor. The positive-switched (pnp) output can be loaded with 10 mA. The computation of the distance and subsequent processing is carried out in the customer's control system.

Our project engineers

will be happy to assist you in integrating a wms sensor into your control system.

	wms-25	wms-35
	0.25 m	0.35 m
measuring range	**30 – 350 mm**	**65 – 600 mm**

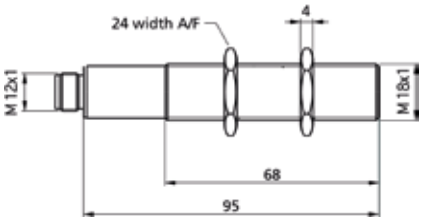

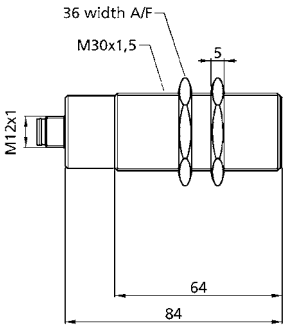

	wms-25	wms-35
blind zone	30 mm (40 mm[1])	65 mm (70 mm[1])
operating range	250 mm	350 mm
maximum range	350 mm	600 mm
angle of beam spread	please see ⓘ	please see ⓘ
transducer frequency	320 kHz	400 kHz
resolution/sampling rate	0.35 mm	0.18 mm
reproducibility	± 0.15 %	± 0.15 %
accuracy	temperature drift 0.17 %/K	temperature drift 0.17 %/K
operating voltage U_B	10 V to 30 V DC, reverse polarity protection	9 V to 30 V DC, reverse polarity protection
voltage ripple	± 10 %	± 10 %
no-load current consumption	≤ 30 mA	≤ 30 mA
housing	brass sleeve, nickel-plated	brass sleeve, nickel-plated
	plastic parts: PBT	plastic parts: PBT
	ultrasonic transducer: polyurethane foam,	ultrasonic transducer: polyurethane foam,
	epoxy resin with glass content	epoxy resin with glass content
class of protection according to EN 60529	IP 65	IP 65
type of connection	4-pin M12 initiator plug	4-pin M12 initiator plug
	material: PBT	material: PBT
operating temperature	-25°C to +70°C	-25°C to +70°C
storage temperature	-40°C to +85°C	-40°C to +85°C
weight	70 g	150 g
signal input (transmitter)	controlled by open collector (npn),	controlled by open collector (npn),
	$I_C \geq 3$ mA, $U_{CE} \geq 30$ V	$I_C \geq 3$ mA, $U_{CE} \geq 30$ V
recommended transmitted pulse length	25 µs	80 µs
recommended measuring cycle time	8 ms	12 ms
signal output (echo)	positive switching (pnp) I_{max} = 10 mA,	positive switching (pnp) I_{max} = 10 mA,
	short-circuit-proof and reverse polarity protection	short-circuit-proof and reverse polarity protection
delay prior to availability	< 300 ms	< 1.5 s
order number	**wms-25/RT/HV/M18**	**wms-35/RT**

transmitter input + echo output

transmitter input + echo output

[1] Cable lengths > 5 m

wms-130

1.3 m

200 – 2,000 mm

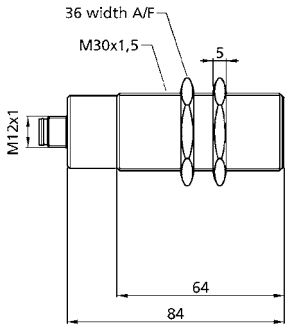

wms-340

3.4 m

350 – 5,000 mm

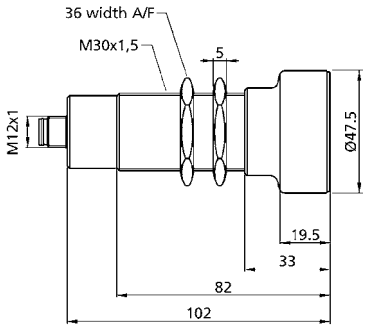

wms-600

6.0 m

800 – 8,000 mm

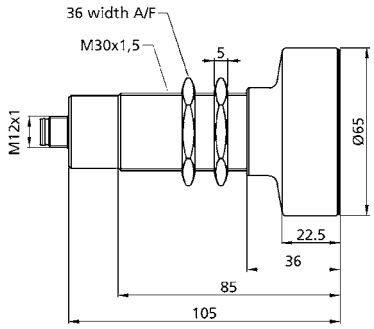

200 mm	350 mm	800 mm
1,300 mm	3,400 mm	6,000 mm
2,000 mm	5,000 mm	8,000 mm
please see ⓘ	please see ⓘ	please see ⓘ
200 kHz	120 kHz	80 kHz
0.18 mm	0.18 mm	0.18 mm
± 0.15 %	± 0.15 %	± 0.15 %
temperature drift 0.17 %/K	temperature drift 0.17 %/K	temperature drift 0.17 %/K
9 V to 30 V DC, reverse polarity protection	9 V to 30 V DC, reverse polarity protection	9 V to 30 V DC, reverse polarity protection
± 10 %	± 10 %	± 10 %
≤ 30 mA	≤ 30 mA	≤ 30 mA
brass sleeve, nickel-plated	brass sleeve, nickel-plated	brass sleeve, nickel-plated
plastic parts: PBT	plastic parts: PBT	plastic parts: PBT
ultrasonic transducer: polyurethane foam,	ultrasonic transducer: polyurethane foam,	ultrasonic transducer: polyurethane foam,
epoxy resin with glass content	epoxy resin with glass content	epoxy resin with glass content
IP 65	IP 65	IP 65
4-pin M12 initiator plug	4-pin M12 initiator plug	4-pin M12 initiator plug
material: PBT	material: PBT	material: PBT
-25°C to +70°C	-25°C to +70°C	-25°C to +70°C
-40°C to +85°C	-40°C to +85°C	-40°C to +85°C
150 g	210 g	270 g
controlled by open collector (npn),	controlled by open collector (npn),	controlled by open collector (npn),
$I_C \geq 3$ mA, $U_{CE} \geq 30$ V	$I_C \geq 3$ mA, $U_{CE} \geq 30$ V	$I_C \geq 3$ mA, $U_{CE} \geq 30$ V
150 µs	300 µs	350 µs
20 ms	40 ms	65 ms
positive switching (pnp) I_{max} = 10 mA,	positive switching (pnp) I_{max} = 10 mA,	positive switching (pnp) I_{max} = 10 mA,
short-circuit-proof and reverse polarity protection	short-circuit-proof and reverse polarity protection	short-circuit-proof and reverse polarity protection
< 1.5 s	< 1.5 s	< 1.5 s
wms-130/RT	**wms-340/RT**	**wms-600/RT**
	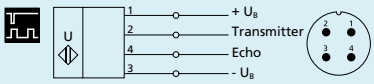	
transmitter input + echo output	transmitter input + echo output	transmitter input + echo output

dbk+4

The ultrasonic double-sheet control dbk+4 combines multiple variants of its predecessor into a single unit, opening up entirely new possibilities for use.

HIGHLIGHTS

- 3 control inputs › for trigger, Teach-in and external sensitivity settings for the material
- Teach-in option › e.g. for probing wafers stuck together by a water film
- Variant with 90° angled head › for individual installation situations
- Variant with external M18 receiving transducer
- Variant with very compact transmitter and receiver in the M12 threaded sleeve

BASICS

- Reliable detection of single and double sheets
- No Teach-in needed (plug and play)
- Double-sheet and missing-sheet output
- Working distance between the transmitter and the receiver selectable from 20 mm to 60 mm
- Trigger option › for applications in warehouse flow
- LinkControl › for configuration of sensors from a PC

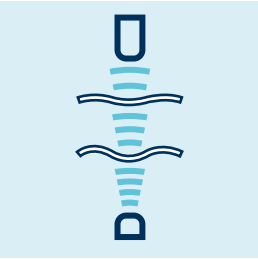

Functional principle

The task

of double-sheet control is to identify two or more pieces or sheets inadvertently adhering together.

The functional principle

A high-frequency ultrasonic transmitter beams against the sheet from the underside. The beamed signal induces the material to vibrate. The effect of these vibrations is a very small sonic wave on the other side of the sheet being spread. This wave is evaluated by the ultrasonic receiver on the opposite side. The signal from the stacked sheet ("double sheet") is so weak that it hardly gets to the receiver.

The working ranges

The dbk+4 has three control inputs by means of which three working ranges can be preselected. The standard working ranges covers the sheet material weight range from 20 g/m^2 to 1,200 g/m^2. Extremely thin materials such as Bible printing paper with a weight per unit area of less than 20 g/m^2 are scanned with the use of the "Thin" setting. The "Thick" setting is available for paperboard containers and fine-corrugated card.

Changes between the working ranges can be undertaken under ongoing operations. A Teach-in for the material to be scanned is not necessary.

If the three control inputs stay unconnected, then the dbk+4 operates in the standard working range. As such, a very broad material spectrum can be scanned.

Teach-in

The Teach-in function is additionally available for materials which cannot be scanned with one of the three working ranges.

A material Teach-in is done by inserting a single sheet into the double-sheet control. The C3 control input is then applied to logic 1 level for at least 3 seconds. Materials with non-homogeneous elements must be moved during the Teach-in phase so that the dbk+4 can detect them. Success with a Teach-in operation is shown by a green LED. The material can now be detected. The Teach-in makes it possible to scan materials from thin Washi to wafers glued with a water film.

Range of uses of dbk+4:

- Sheet-printing machines
- Assembly machines
- Folding machines
- Paper-processing machines
- Manufacturing of solar cells and silicon wafers
- Labelling
- PCB manufacturing

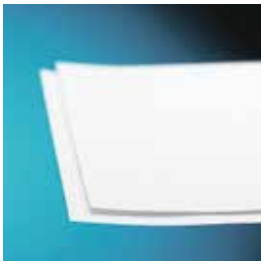

Paper

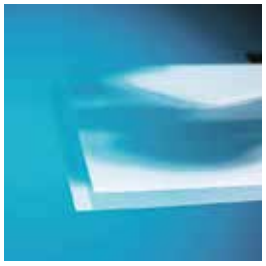

Film

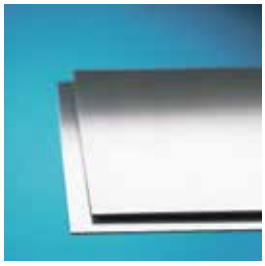

Sheet metal

Double-sheet control

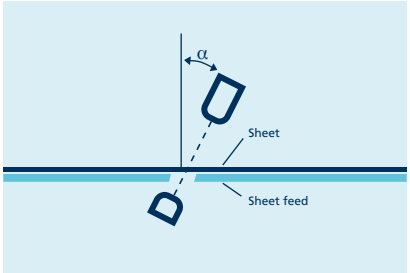

Fine-corrugated card can be optimally detected at an inclination of $\alpha \geq 35°$, thin sheet metal or thicker plastic films at 27° and wafers at an angle of 11°

The mounting

The recommended spacing between transmitter and receiver is 40 mm (or 20 mm with dbk+4/M12/3CDD/M18 E+S).

If needed, this spacing can be adapted to the local conditions in the 20 mm to 60 mm range. For the matter of commissioning, this can be done by means of a simple Teach-in or with the LinkControl parameterisation software.

Material-conditioned fitting position

With papers and thin films, the double-sheet control is operated perpendicularly to the material; flapping does not impair the function.

In the case of fine-corrugated card, thin sheet metal, wafers or thicker plastic films (e. g. credit cards), the dbk+4 should be mounted at a specific angle of inclination to the material running through.

The free-run mode

The dbk+4 operates as standard in the free-run mode. This means that the dbk+4 cyclically carries out measurements at a high measuring rate.

Under ongoing operations, the working range can be changed and a Teach-in carried out by means of the C1 to C3 control inputs.

	C1	C2	C3
Standard	0	0	0
Thick	0	1	0
Thin	1	0	0
Teach mode	1	1	0
Teach-in	1	1	1

Free-run mode – selection of the working range

The trigger mode

Should, on the other hand, measurements be undertaken in applications with continuous feed, then an external trigger signal can trigger a measurement.

This function is parameterised with the aid of the LinkControl software. A choice can be made between edge trigger and level trigger.

The C2 control input then assumes the function of the trigger input (tr).

	C1	C2	C3
Standard	0	tr	0
Thin	0	tr	1
Teach mode	1	tr	0
Teach-in	1	tr	1

Trigger mode – selection of the working range

Under ongoing operations, the working range can be changed by means of the C3 control input.

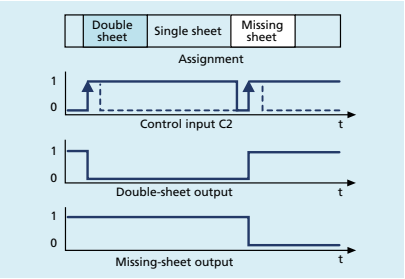

Trigger mode – edge-controlled

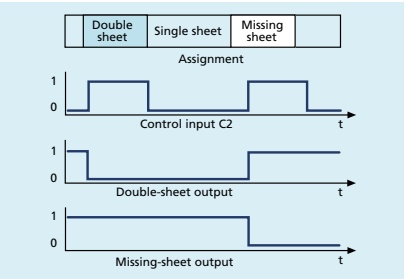

Trigger mode – level-controlled

Support through LinkControl

dbk+4 can be comprehensively parameterised with the aid of the LinkControl software. To this end, the dbk+4 is connected to the LCA-2 LinkControl adapter. Using the LinkControl software, a USB cable connects the LCA-2 to the PC.

The following parameters can be individually adapted:

- Spacing between transmitter and receiver
- Double sheet: NOC/NCC
- Single sheet or missing sheet: NOC/NCC
- Trigger mode: on/off
- Edge-controlled trigger: falling/rising edge
- Level-controlled trigger: high/low active
- Switch-on delay for detecting double sheet
- Switch-off delay for detecting double sheet
- Threshold values for the working ranges

The LinkControl adapter LCA-2

The four variants

Four housing variants cover all imaginable fitting positions.

a) Standard

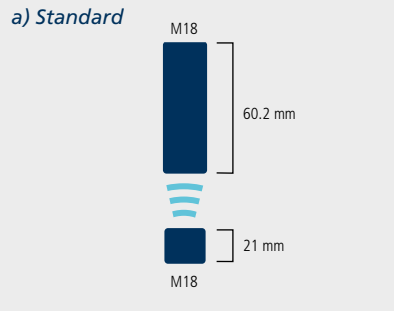

b) Receiver with 90° angular head

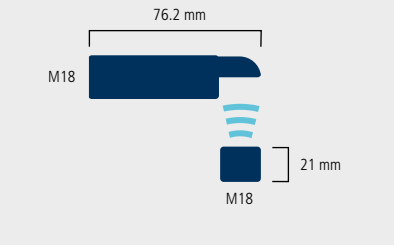

c) External receiver with M18 threaded sleeve

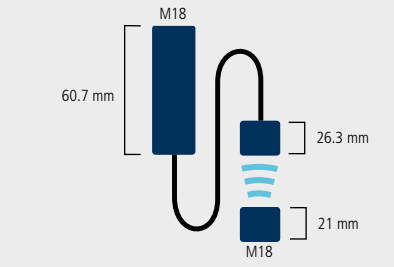

d) Transmitter and receiver with M12 threaded sleeves

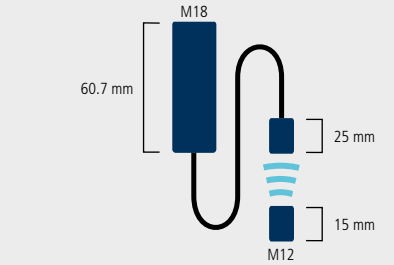

dbk+4

dbk+4

	dbk+4/3CDD/M18 E+S	dbk+4/3BEE/M18 E+S	dbk+4/WK/3CDD/M18 E+S	dbk+4/WK/3BEE/M18 E+S

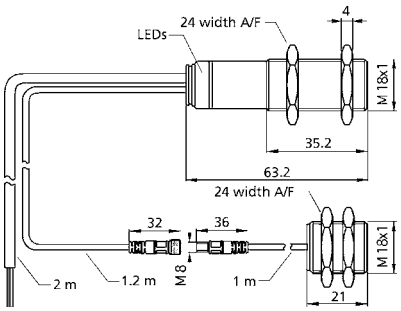

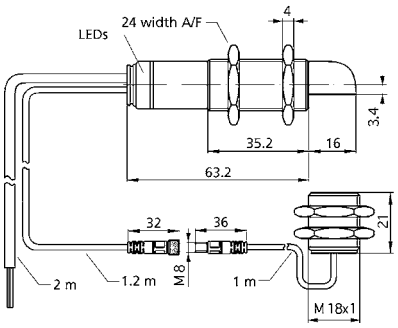

	dbk+4/3CDD/M18 E+S / dbk+4/3BEE/M18 E+S	dbk+4/WK/3CDD/M18 E+S / dbk+4/WK/3BEE/M18 E+S
transmitter/receiver spacing	20–60 mm; optimal: 40 mm ± 3 mm	20–60 mm; optimal: 40 mm ± 3 mm
blind zone	7 mm in front of transmitter and receiver	7 mm in front of transmitter and receiver
permissible angular deviation	± 45° from the perpendicular to the sheet	± 45° from the perpendicular to the sheet
transducer frequency	400 kHz	400 kHz
working range	papers with weights of 20 g/m² to 2,000 g/m², Washi, metal-laminated sheets and films up to 0.4 mm thick, self-adhesive films, sheet metal up to 0.3 mm thick, fine-corrugated card, wafers, PCBs	papers with weights of 20 g/m² to 2,000 g/m², Washi, metal-laminated sheets and films up to 0.4 mm thick, self-adhesive films, sheet metal up to 0.3 mm thick, fine-corrugated card, wafers, PCBs
operating voltage U_B	20 V to 30 V DC	20 V to 30 V DC
no-load current consumption	≤ 50 mA	≤ 50 mA
type of connection	2 m PUR cable, 7 x 0.25 mm²	2 m PUR cable, 7 x 0.25 mm²
transmitter cable	at the receiver: 1.2 m PUR cable, at the transmitter: 1 m PUR cable with M8 plug	at the receiver: 1.2 m PUR cable, at the transmitter: 1 m PUR cable with M8 plug
controls	3 control inputs: C1 to C3	3 control inputs: C1 to C3
scope for settings	• working range selection via control inputs • Teach-in via control inputs • LCA-2 with LinkControl	• working range selection via control inputs • Teach-in via control inputs • LCA-2 with LinkControl
indicators	duo-LED; green: working, red: double sheet, flashing red: missing sheet	duo-LED; green: working, red: double sheet, flashing red: missing sheet
housing	brass sleeve, nickel-plated, plastic parts: PBT, PA; ultrasonic transducer: polyurethane foam, epoxy resin with glass content	brass sleeve, nickel-plated, plastic parts: PBT, PA; ultrasonic transducer: polyurethane foam, epoxy resin with glass content
class of protect. acc. to EN 60529	IP 65	IP 65
operating temperature	+5°C to +60°C	+5°C to +60°C
storage temperature	-40°C to +85°C	-40°C to +85°C
weight	130 g	130 g
response time	< 500 µs in trigger mode, 2.5 ms in free-run mode	< 500 µs in trigger mode, 2.5 ms in free-run mode
release delay	until next edge in trigger mode, 2.5 ms in free-run mode	until next edge in trigger mode, 2.5 ms in free-run mode
order number	**dbk+4/3CDD/M18 E+S**	**dbk+4/WK/3CDD/M18 E+S**
double-sheet output	pnp, U_B-2 V, I_{max} = 200 mA NOC/NCC adjustable, short-circuit-proof	pnp, U_B-2 V, I_{max} = 200 mA NOC/NCC adjustable, short-circuit-proof
missing-sheet output	pnp, U_B-2 V, I_{max} = 200 mA NOC/NCC adjustable, short-circuit-proof	pnp, U_B-2 V, I_{max} = 200 mA NOC/NCC adjustable, short-circuit-proof
delay prior to availability	< 300 ms	< 300 ms

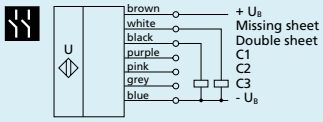

2 pnp switching outputs

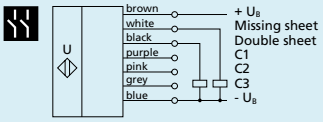

2 pnp switching outputs

	dbk+4/3BEE/M18 E+S	dbk+4/WK/3BEE/M18 E+S
order number	**dbk+4/3BEE/M18 E+S**	**dbk+4/WK/3BEE/M18 E+S**
double-sheet output	npn, -U_B+2 V, I_{max} = 200 mA NOC/NCC adjustable, short-circuit-proof	npn, -U_B+2 V, I_{max} = 200 mA NOC/NCC adjustable, short-circuit-proof
missing-sheet output	npn, -U_B+2 V, I_{max} = 200 mA NOC/NCC adjustable, short-circuit-proof	npn, -U_B+2 V, I_{max} = 200 mA NOC/NCC adjustable, short-circuit-proof
delay prior to availability	< 750 ms	< 750 ms

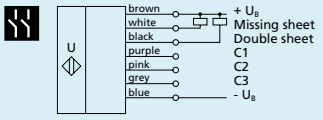

2 npn switching outputs

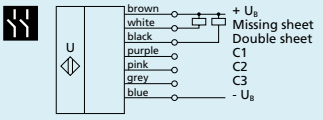

2 npn switching outputs

dbk+4

dbk+4/M18/3CDD/M18 E+S dbk+4/M18/3BEE/M18 E+S

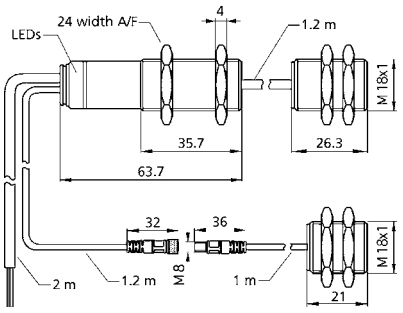

20–60 mm; optimal: 40 mm ± 3 mm	
7 mm in front of transmitter and receiver	
± 45° from the perpendicular to the sheet	
400 kHz	
papers with weights of 20 g/m² to 2,000 g/m², Washi,	
metal-laminated sheets and films up to 0.4 mm thick, self-adhesive films,	
sheet metal up to 0.3 mm thick, fine-corrugated card, wafers, PCBs	
20 V to 30 V DC	
≤ 50 mA	
2 m PUR cable, 7 x 0.25 mm²	
at the receiver: 1.2 m PUR cable,	
at the transmitter: 1 m PUR cable with M8 plug;	
to the swapped out receiving transducer: 1.2 m PVC cable	
3 control inputs: C1 to C3	
• working range selection via control inputs	
• Teach-in via control inputs	
• LCA-2 with LinkControl	
duo-LED; green: working, red: double sheet, flashing red: missing sheet	
brass sleeve, nickel-plated, plastic parts: PBT, PA; ultrasonic	
transducer: polyurethane foam, epoxy resin with glass content	
IP 65	
+5°C to +60°C	
-40°C to +85°C	
165 g	
< 500 µs in trigger mode, 2.5 ms in free-run mode	
until next edge in trigger mode, 2.5 ms in free-run mode	
dbk+4/M18/3CDD/M18 E+S	
pnp, U_B-2 V, I_{max} = 200 mA	
NOC/NCC adjustable, short-circuit-proof	
pnp, U_B-2 V, I_{max} = 200 mA	
NOC/NCC adjustable, short-circuit-proof	
< 300 ms	

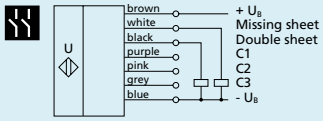

2 pnp switching outputs

dbk+4/M18/3BEE/M18 E+S	
npn, -U_B+2 V, I_{max} = 200 mA	
NOC/NCC adjustable, short-circuit-proof	
npn, -U_B+2 V, I_{max} = 200 mA	
NOC/NCC adjustable, short-circuit-proof	
< 750 ms	

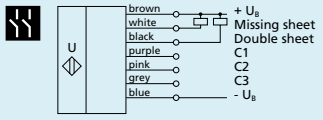

2 npn switching outputs

dbk+4

dbk+4/M12/3CDD/M18 E+S dbk+4/M12/3BEE/M18 E+S

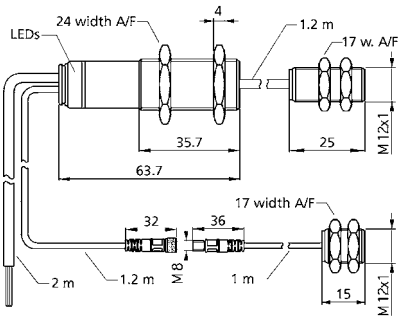

20–40 mm; optimal: 20 mm ± 2 mm	
5 mm in front of transmitter and receiver	
± 45° from the perpendicular to the sheet	
500 kHz	
papers with weights of 20 g/m² to 600 g/m², Washi,	
metal-laminated sheets and films up to 0.2 mm thick, self-adhesive films	
20 V to 30 V DC	
≤ 50 mA	
2 m PUR cable, 7 x 0.25 mm²	
at the receiver: 1.2 m PUR cable,	
at the transmitter: 1 m PUR cable with M8 plug;	
to the swapped out receiving transducer: 1.2 m PVC cable	
3 control inputs: C1 to C3	
• working range selection via control inputs	
• Teach-in via control inputs	
• LCA-2 with LinkControl	
duo-LED; green: working, red: double sheet, flashing red: missing sheet	
brass sleeve, nickel-plated, plastic parts: PBT, PA;	
ultrasonic transducer: polyurethane foam, epoxy resin with glass content	
IP 65	
+5°C to +60°C	
-40°C to +85°C	
160 g	
< 500 µs in trigger mode, 2.5 ms in free-run mode	
until next edge in trigger mode, 2.5 ms in free-run mode	
dbk+4/M12/3CDD/M18 E+S	
pnp, U_B-2 V, I_{max} = 200 mA	
NOC/NCC adjustable, short-circuit-proof	
pnp, U_B-2 V, I_{max} = 200 mA	
NOC/NCC adjustable, short-circuit-proof	
< 300 ms	

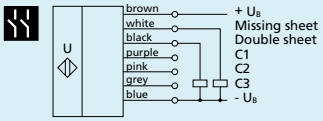

2 pnp switching outputs

dbk+4/M12/3BEE/M18 E+S	
npn, -U_B+2 V, I_{max} = 200 mA	
NOC/NCC adjustable, short-circuit-proof	
npn, -U_B+2 V, I_{max} = 200 mA	
NOC/NCC adjustable, short-circuit-proof	
< 750 ms	

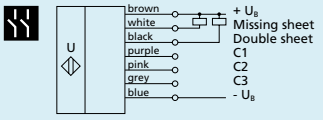

2 npn switching outputs

dbk+5

Extends the area of application of double-sheet controls to heavy carton, corrugated cardboard and plastic sheets.

HIGHLIGHTS

- High-performance ultrasonic double-sheet control › especially for the probing of corrugated cardboard as well as plastic plates several mm thick
- 3 control inputs › for trigger, Teach-in, and external sensitivity settings for the material
- Teach-in option › e.g. for probing plates stuck together with an oil film
- Compact design in M18 x 1 threaded tube

BASICS

- Reliable detection of single and double sheets
- No Teach-in needed (plug and play)
- Double-sheet and missing-sheet output
- Working distance between the transmitter and the receiver selectable from 30 mm to 70 mm
- Trigger option › for applications in warehouse flow
- LinkControl › for configuration of sensors from a PC

The dbk+5 ultrasonic double-sheet control

is designed for scanning thin sheet metal, plastic sheets and corrugated cardboard with thicknesses exceeding the working range of the dbk+4 sensors. The principle behind the operation is the same as for the dbk+4 sensors. The main difference between the systems lies in the materials to be detected. (For further information, see dbk+4.)

Typical materials

in the range of applications of the dbk+5 are sheet metal up to approx. 2 mm thick (depending on the type of metal), plastic sheets and boards for printed circuits up to a thickness of several millimetres, and coarse, corrugated card.

Papers require the sensors to be mounted perpendicular to the passing sheets. But in the case of sheet metal, plastic sheets and boards for printed circuits, it is preferable to mount the dbk+5 at an angle of 10–18° to the passing sheets. The optimum angle should be determined by way of trials. Corrugated cards should be scanned at an angle of 35–45° to the corrugations.

Transmitter and receiver

are housed in M18 x 1 mm threaded sleeves which should be mounted from 30 mm to 70 mm apart.

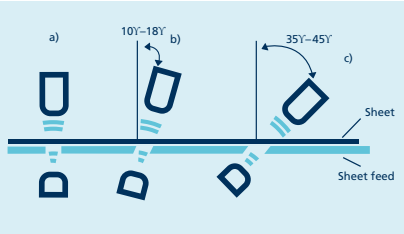

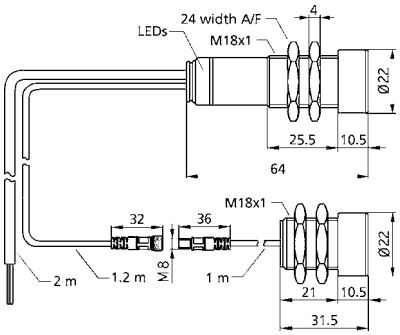

	dbk+5/3CDD/M18 E+S	dbk+5/3BEE/M18 E+S
transmitter/receiver spacing	30–70 mm; optimal: 50 mm ± 3 mm	
blind zone	7 mm in front of transmitter and receiver	
permissible angular deviation	± 45° from the perpendicular to the sheet	
transducer frequency	200 kHz	
working range	papers with weights of 100 g/m² to 2,000 g/m², plastic sheets and films up to 5 mm thick*, self-adhesive films, sheet metal up to 2 mm thick*, corrugated cardboard, wafers, PCBs (*: material-dependent)	
operating voltage U_B	20 V to 30 V DC	
no-load current consumption	≤ 50 mA	
type of connection	2 m PUR cable, 7 x 0.25 mm²	
transmitter cable	at the receiver: 1.2 m PUR cable, at the transmitter: 1 m PUR cable with M8 plug	
controls	3 control inputs: C1 to C3	
scope for settings	• working range selection via control inputs • Teach-in via control inputs • LCA-2 with LinkControl	
indicators	duo-LED; green: working, red: double sheet, flashing red: missing sheet	
housing	brass sleeve, nickel-plated, plastic parts: PBT, PA; ultrasonic transducer: polyurethane foam, epoxy resin with glass content	
class of protection according to EN 60529	IP 65	
operating temperature	+5°C to +60°C	
storage temperature	-40°C to +85°C	
weight	150 g	
response time	< 500 µs in trigger mode, 5.5 ms in free-run mode	
release delay	until next edge in trigger mode, 5.5 ms in free-run mode	
order number	**dbk+5/3CDD/M18 E+S**	
double-sheet output	pnp, U_B-2 V, I_{max} = 200 mA NOC/NCC adjustable, short-circuit-proof	
missing-sheet output	pnp, U_B-2 V, I_{max} = 200 mA NOC/NCC adjustable, short-circuit-proof	
delay prior to availability	< 300 ms	

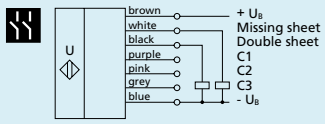

2 pnp switching outputs

order number	**dbk+5/3BEE/M18 E+S**
double-sheet output	npn, -U_B+2 V, I_{max} = 200 mA NOC/NCC adjustable, short-circuit-proof
missing-sheet output	npn, -U_B+2 V, I_{max} = 200 mA NOC/NCC adjustable, short-circuit-proof
delay prior to availability	< 750 ms

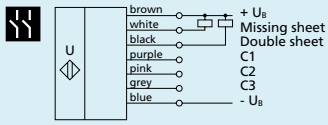

2 npn switching outputs

esp-4

Label and splice sensor compact in a single unit, optionally with M12 sensor head.

HIGHLIGHTS

- 3 Teach-in methods › to be able to configure the sensor individually for any task
- Response time < 300 µs › for use at high web and label speeds
- Splice detection even for thick band materials
- Variant with very compact transmitter and receiver in the M12 threaded sleeve

BASICS

- Label and splice sensor in a single unit
- 2 switching outputs › for label/splice detection and web break monitoring
- LinkControl › as optional assistance for installation and commissioning

esp-4 – one unit for all cases: label and splice sensor in one appliance

With a rapid pulse sequence, an ultrasonic transmitter beams upwards against the backing material. The effect of the sound pulses inducing the backing material to vibrate is for a markedly weakened sonic wave to be emitted on the opposite side.

The receiver receives this sonic wave and analyses it. The backing material signal level is different to that of the label or splice. And this difference in signal is analysed by the esp-4. The difference between backing material and a label or between sheeting and splice can be very slight indeed. In order to differentiate, the esp-4 sensor has to learn the signal level for the backing material or sheeting.

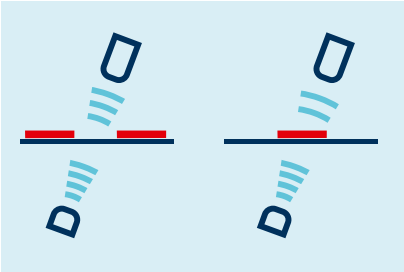

Backing material with label provides an attenuated signal level

The esp-4 sensors can be used as a label and splice sensor. The three Teach-in methods permit the esp-4 sensor to be optimally set for each and every assignment.

A) Dynamic Teach-in of backing material and label

During Teach-in, the backing material with the labels is led at a constant speed through the esp-4 sensor.

The esp-4 sensor automatically learns signal levels for the labels and for the gaps between them.

This Teach-in method is also suitable for Teach-in of a tear-open string on a cellophane film. Here, during Teach-in, the tear-open string on the cellophane film is moved a number of times through the sensor. This enables the esp-4 to gauge the changing between cellophane film and tear-open string.

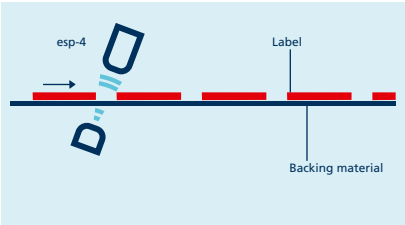

esp-4 as label sensor

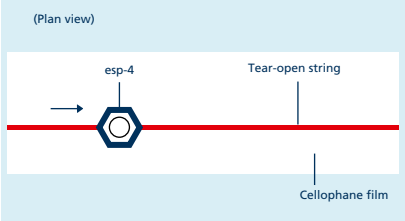

esp-4 as thread sensor

B) Separate Teach-in for backing material and labels

The signal level difference for the backing material and labels might be very slight. In order to still scan labels with very little difference in signals, Teach-in for the signal levels is done separately: Teach-in is first done for the backing material and then for the label on it. The switching threshold then lies between these two signal levels.

C) Learn sheeting only

Sheeting is usually processed from the roll. Then the splice to be detected for setting the esp-4 is somewhere inaccessible in this roll. A separate Teach-in method is available here in which the Teach-in only applies to the sheeting. The esp-4 detects the splice from this difference in sound level and sets its output.

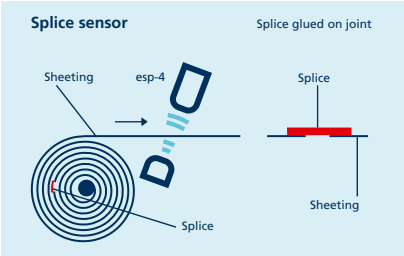

esp-4 as splice sensor

Two housing designs with different ultrasonic frequencies

The esp-4/3CDD/M18 E+S as a receiving transducer integrated directly into the evaluation electronics is typically used for the detection of splices in thick sheeting.

The esp-4/M12/3CDD/M18 E+S has an external receiving transducer. The transmitter and receiver are each housed in M12 threaded sleeves. The variant with M12 sensor heads is preferred for the detection of labels.

With LinkControl

the esp-4 can optionally be parameterised. Measured values can also be shown graphically.

	esp-4	esp-4
	esp-4/3CDD/M18 E+S **esp-4/3BEE/M18 E+S**	**esp-4/M12/3CDD/M18 E+S** **esp-4/M12/3BEE/M18 E+S**

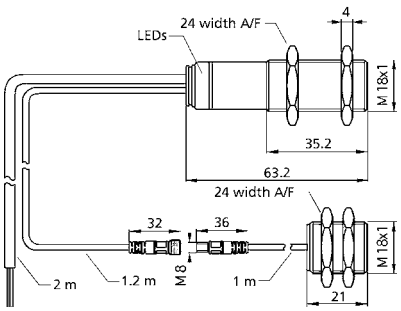

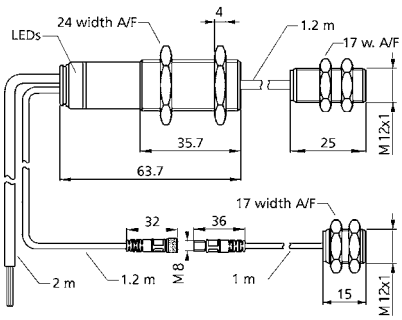

transmitter/receiver spacing	20–40 mm; optimal: 40 mm ± 3 mm	20–30 mm; optimal: 20 mm ± 2 mm
blind zone	7 mm in front of transmitter and receiver	5 mm in front of transmitter and receiver
permissible angular deviation	recommended mounting angle: ± 15° (± 10° to ± 27°) from the normal line to the material	recommended mounting angle: ± 15° (± 10° to ± 27°) from the normal line to the material
transducer frequency	400 kHz	500 kHz
working range	sheeting with weights of < 20 g/m² to >> 600 g/m², metal-laminated sheets and films up to 0.6 mm thick, self-adhesive films, labels on backing material	sheeting with weights of < 20 g/m² to >> 600 g/m², metal-laminated sheets and films up to 0.6 mm thick, self-adhesive films, labels on backing material
operating voltage U_B	20 V to 30 V DC	20 V to 30 V DC
no-load current consumption	≤ 50 mA	≤ 50 mA
type of connection	2 m PUR cable, 7 x 0.25 mm²	2 m PUR cable, 7 x 0.25 mm²
transmitter cable	at the receiver: 1.2 m PUR cable, at the transmitter: 1 m PUR cable with M8 plug	at the receiver: 1.2 m PUR cable, at the transmitter: 1 m PUR cable with M8 plug; to the swapped out receiving transducer: 1.2 m PVC cable
controls	3 control inputs: C1 to C3	3 control inputs: C1 to C3
scope for settings	• Teach-in via control inputs • LCA-2 with LinkControl	• Teach-in via control inputs • LCA-2 with LinkControl
indicators	duo-LED; green: working, red: label/splice detected, flashing red: web break	duo-LED; green: working, red: label/splice detected, flashing red: web break
housing	brass sleeve, nickel-plated, plastic parts: PBT, PA; ultrasonic transducer: polyurethane foam, epoxy resin with glass content	brass sleeve, nickel-plated, plastic parts: PBT, PA; ultrasonic transducer: polyurethane foam, epoxy resin with glass content
class of protection according to EN 60529	IP 65	IP 65
operating temperature	+5°C to +60°C	+5°C to +60°C
storage temperature	-40°C to +85°C	-40°C to +85°C
weight	130 g	160 g
response time	300 µs to 2.25 ms, depending on material	300 µs to 2.25 ms, depending on material
release delay	300 µs to 2.25 ms, depending on material	300 µs to 2.25 ms, depending on material
delay prior to availability	< 300 ms	< 300 ms
order number	**esp-4/3CDD/M18 E+S**	**esp-4/M12/3CDD/M18 E+S**
output label/splice detected	pnp, U_B-2 V, I_{max} = 200 mA NOC/NCC adjustable, short-circuit-proof	pnp, U_B-2 V, I_{max} = 200 mA NOC/NCC adjustable, short-circuit-proof
output web break	pnp, U_B-2 V, I_{max} = 200 mA NOC/NCC adjustable, short-circuit-proof	pnp, U_B-2 V, I_{max} = 200 mA NOC/NCC adjustable, short-circuit-proof

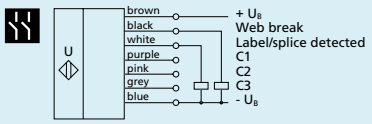

2 pnp switching outputs

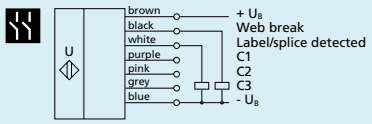

2 pnp switching outputs

order number	**esp-4/3BEE/M18 E+S**	**esp-4/M12/3BEE/M18 E+S**
output label/splice detected	npn, -U_B+2 V, I_{max} = 200 mA NOC/NCC adjustable, short-circuit-proof	npn, -U_B+2 V, I_{max} = 200 mA NOC/NCC adjustable, short-circuit-proof
output web break	npn, -U_B+2 V, I_{max} = 200 mA NOC/NCC adjustable, short-circuit-proof	npn, -U_B+2 V, I_{max} = 200 mA NOC/NCC adjustable, short-circuit-proof

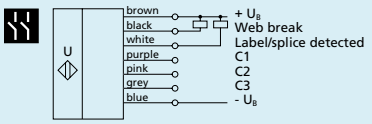

2 npn switching outputs

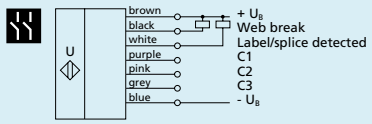

2 npn switching outputs

esf-1

The esf-1 fork sensor can detect labels reliably even at high label speeds.

HIGHLIGHTS

- 3 Teach-in methods › for the detection of labels even outside the standard
- Response time < 300 µs › for use at high web speeds
- Housing in fork format with very compact dimensions
- QuickTeach
- IO-Link interface › for support of the new industry standard

BASICS

- Label and splice sensor as a fork sensor
- 2 switching outputs › for label/splice detection and web break monitoring
- 3 LEDs and 1 button on the top of the housing
- Teach-in optionally via button or pin 5
- LinkControl › as optional assistance for installation and commissioning

IO-Link integrated

Also see the chapter "Function and advantages"

The functional principle

Labels are guided through the fork. An ultrasonic transmitter in the lower leg of the fork beams a fast sequence of pulses through the backing material. The sound pulses cause the backing material to vibrate such that a greatly attenuated sound wave is beamed from the opposite side. The receiver in the upper leg of the fork receives this sound wave.

The backing material transmits a different signal level from the label. This signal difference is evaluated by the esf-1. The signal difference between the backing material and the label can be very slight. To ensure a reliable distinction, the esf-1 has to learn the label.

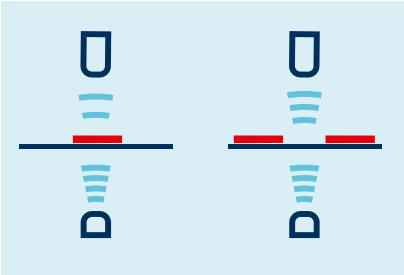

Backing material with a label provides an attenuated signal level.

The esf-1

can be used as a label sensor or as a splice sensor. With its three Teach-in methods or QuickTeach, the esf-1 sensor can be optimally adjusted to any task configuration.

A) Learn both backing material and label dynamically

During the Teach-in process, the backing material and its labels are guided through the fork at a constant speed.

The esf-1 sensor automatically learns the signal level for the labels and for the gaps between the labels.

This is the standard Teach-in for labels.

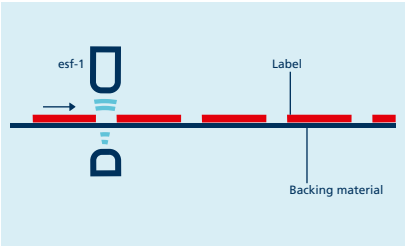

esf-1 as label sensor

B) Separate Teach-in for backing material and labels

The signal level difference for the backing material and labels might be very slight. In order to still scan labels with very little difference in signals, Teach-in for the signal levels is done separately: Teach-in is first done for the backing material and then for the label on it. The switching threshold then lies between these two signal levels.

C) Learn sheeting only

Web material is generally processed from a roll. The splice to be detected is hidden somewhere in the roll. There is a separate Teach-in method available for this purpose, in which only the sheeting is learned. The esf-1 detects the level difference at the splice and sets its output.

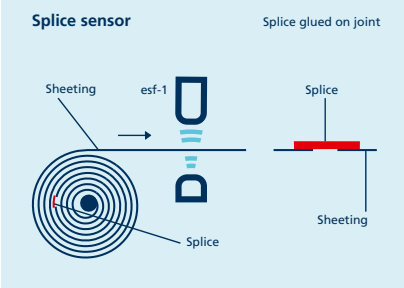

esf-1 as splice sensor

The Teach-in procedure

can optionally be carried out with the button on the top of the housing or with pin 5 on the unit's connector.

For QuickTeach

the esf-1 learns the material for the duration that the button is pushed or pin 5 is controlled.

With LinkControl

the esf-1 can optionally be parameterised. Measured values can also be shown graphically.

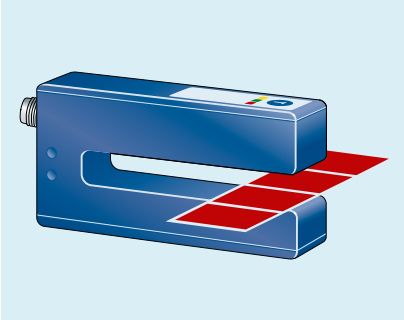

Labels are guided through the fork. The esf-1 reacts to the signal difference between the backing material and the label.

IO-Link

esf ultrasonic label and splice sensors have a Push-Pull switching output and support IO-Link in version 1.1.

	esf-1	esf-1
	esf-1/CF/A	**esf-1/CDF/A**
	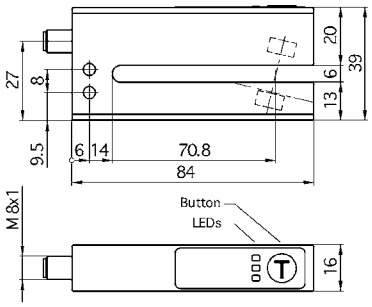	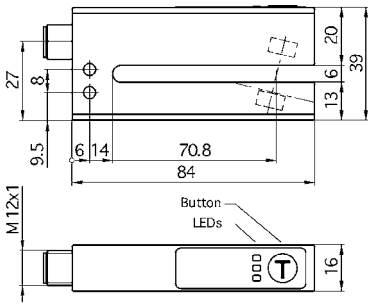
fork width	6 mm	6 mm
fork depth	67 mm	67 mm
transducer frequency	500 kHz	500 kHz
working range	sheeting with weights of < 20 g/m²	sheeting with weights of < 20 g/m²
	to >> 400 g/m², metal-laminated sheets and films	to >> 400 g/m², metal-laminated sheets and films
	up to 0.2 mm thick, self-adhesive films,	up to 0.2 mm thick, self-adhesive films,
	labels on backing material	labels on backing material
operating voltage U_B	20 V to 30 V DC	20 V to 30 V DC
no-load current consumption	≤ 50 mA	≤ 50 mA
type of connection	4-pin M8 initiator plug	5-pin M12 initiator plug
controls	button und com input (pin 2)	button und com input (pin 5)
scope for settings	• Teach-in via push-button	• Teach-in via push-button
	• Teach-in via com input on pin 2	• Teach-in via com input on pin 5
	• LCA-2 with LinkControl	• LCA-2 with LinkControl
	• IO-Link	• IO-Link
indicators	3 LEDs: green: working, yellow: label/splice detected,	3 LEDs: green: working, yellow: label/splice detected,
	red: web break	red: web break
housing	anodised aluminium; ultrasonic transducer:	anodised aluminium; ultrasonic transducer:
	polyurethane foam, epoxy resin with glass content	polyurethane foam, epoxy resin with glass content
class of protection according to EN 60529	IP 65	IP 65
IO-Link	V 1.1	V 1.1
IO-Link SIO mode support	yes	yes
IO-Link min. cycle time	4 ms	4 ms
Smart Sensor Profile	yes	yes
operating temperature	+5°C to +60°C	+5°C to +60°C
storage temperature	-40°C to +85°C	-40°C to +85°C
weight	80 g	80 g
response time	300 µs to 2.25 ms, depending on material	300 µs to 2.25 ms, depending on material
release delay	300 µs to 2.25 ms, depending on material	300 µs to 2.25 ms, depending on material
delay prior to availability	< 300 ms	< 300 ms
order number	**esf-1/CF/A**	**esf-1/CDF/A**
output F label/splice detected	Push-Pull, U_B-3 V, -U_B+3 V, I_{max} = 100 mA	Push-Pull, U_B-3 V, -U_B+3 V, I_{max} = 100 mA
	NOC/NCC adjustable, short-circuit-proof	NOC/NCC adjustable, short-circuit-proof
output D web break		pnp, U_B-2 V, I_{max} = 100 mA
		NOC/NCC adjustable, short-circuit-proof
	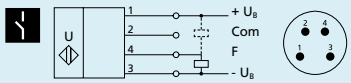	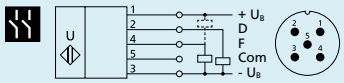
	1 Push-Pull switching output	1 Push-Pull and 1 pnp switching output

esf-1/15/CDF/A

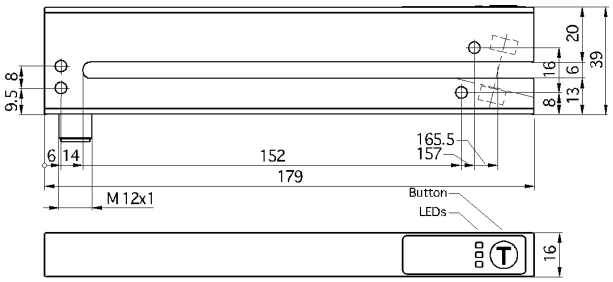

6 mm
149.5 mm
500 kHz
sheeting with weights of < 20 g/m²
to >> 400 g/m², metal-laminated sheets and films
up to 0.2 mm thick, self-adhesive films,
labels on backing material
20 V to 30 V DC
≤ 50 mA
5-pin M12 initiator plug
button und com input (pin 5)
• Teach-in via push-button
• Teach-in via com input on pin 5
• LCA-2 with LinkControl
• IO-Link
3 LEDs: green: working, yellow: label/splice detected,
red: web break
anodised aluminium; ultrasonic transducer:
polyurethane foam, epoxy resin with glass content
IP 65
V 1.1
yes
4 ms
yes
+5°C to +60°C
-40°C to +85°C
160 g
300 µs to 2.25 ms, depending on material
300 µs to 2.25 ms, depending on material
< 300 ms
esf-1/15/CDF/A
Push-Pull, U_B-3 V, -U_B+3 V, I_{max} = 100 mA
NOC/NCC adjustable, short-circuit-proof
pnp, U_B-2 V, I_{max} = 100 mA
NOC/NCC adjustable, short-circuit-proof

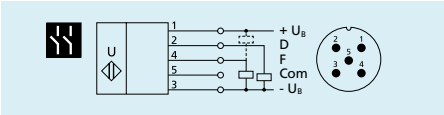

1 Push-Pull and 1 pnp switching output

bks+

Edge sensor with a wide working range for contact-free web edge detection of foils, paper and other noise-absorbing materials.

HIGHLIGHTS

- Housing designs › with 30 mm and 60 mm fork width
- Available in 12 mm or 40 mm measurement range
- IO-Link interface › for support of the new industry standard
- 0.01 mm to 0.02 mm resolution
- Very compact housing dimensions

BASICS

- Contact-free detection of the path edge › for regulation of the web path
- Analogue outputs 4–20 mA and 0–10 V › switchable between current and voltage outputs
- 3 LEDs and 1 button on the top of the housing
- Parameterisable with LinkControl
- Robust metal housing

IO-Link integrated

Also see in chapter "Function and advantages"

The bks+ ultrasonic edge sensors

are an advanced development of the edge sensor bks-3/CIU. The bks+ edge sensors have a much wider working range at 12 mm or 40 mm. In addition to an analogue output 4–20 mA and 0–10 V, there is an additional switching output with IO-Link available.

The functional principle

Both transducer and receiver are placed in a single, slim fork housing. The transducer in the lower leg emits short, cyclical sound pulses. These are detected by the ultrasonic receiver in the upper leg of the fork. A material embedded in the fork covers the sound gap and thereby dampens the receiving signal depending on the coverage. This is analysed by internal electronics.

An analogue signal is output depending on the degree of coverage, resp. data word via IO-Link.

1 Push-Pull switching output in pnp and npn switching technology and 1 analogue output 4–20 mA or 0–10 V

The working range for the bks+3/FIU is 12 mm and for the bks+6/FIU is 40 mm.

Using the Teach-in button

on the upper side of the edge sensor sets the zero point for the local edge. This calibration can be done in two ways:

- Clear the fork completely of any web material,
- push the button for approx. 3 seconds,
- cover the fork sensor completely and push the button briefly (< 1 s). Ready.

  Or
- adjust the path edge within the fork to both markings so that 50% of the sound gap is covered,
- then push the button for approx. 6 seconds.

The edge sensor bks+3/FIU has a fork width of 30 mm and a fork depth of 43 mm. The edge sensor bks+6/FIU has a fork width of 60 mm and a fork depth of 73 mm. There are two through bores to mount edge sensors in the side of the housing. The electrical connection is via an M12 circular plug.

Three LEDs

show the position of the web material within the fork. When using light-sensitive materials, the LEDs can be switched off.

Ultrasonic edge sensors sample the edge of audio-signal-absorbing materials such as foils or paper. They are especially suited to web path control of high-transparency foils, light-sensitive materials or materials with greatly varying transparency.

Switching over

between current and voltage outputs is done by using the button or LinkControl. The bks+ is preset and can be used immediately. Optionally it can also be comprehensively parameterised using the LinkControl adapter LCA-2 (see the chapter "Accessories").

IO-Link in version 1.1

is integrated as standard. Further information about the IO-Link can be found in the chapter "Functions and advantages: IO-Link in detail".

	bks+3	bks+6
	bks+3/FIU	**bks+6/FIU**

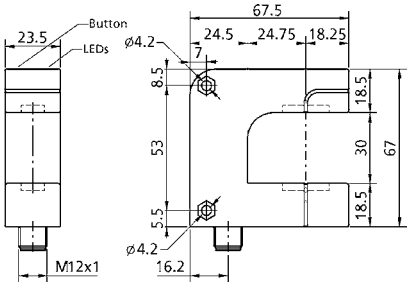

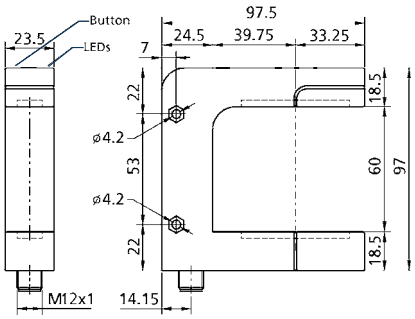

blind zone	5 mm in front of transmitter and receiver	5 mm in front of transmitter and receiver
fork width	30 mm	60 mm
fork depth	43 mm	73 mm
transducer frequency	170 kHz	310 kHz
resolution/sampling rate	0.01 mm	0.02 mm
reproducibility	± 0.1 mm at constant ambient conditions	± 0.1 mm at constant ambient conditions
working range	≥ 12 mm (± 6 mm)	≥ 40 mm (± 20 mm)
operating voltage U_B	20 V to 30 V DC, reverse polarity protection	20 V to 30 V DC, reverse polarity protection
no-load current consumption	≤ 60 mA	≤ 60 mA
housing	zinc die-casting, plastic parts: PBT;	zinc die-casting, plastic parts: PBT;
	ultrasonic transducer: polyurethane foam,	ultrasonic transducer: polyurethane foam,
	epoxy resin with glass content	epoxy resin with glass content
class of protection according to EN 60529	IP 65	IP 65
type of connection	5-pin M12 initiator plug	5-pin M12 initiator plug
controls	1 push-button	1 push-button
scope for settings	• Teach-in via push-button	• Teach-in via push-button
	• LCA-2 with LinkControl	• LCA-2 with LinkControl
	• IO-Link	• IO-Link
indicators	LED green: centre or within switching window	LED green: centre or within switching window
	2 LEDs yellow: deviation from centre/switching window	2 LEDs yellow: deviation from centre/switching window
IO-Link	V 1.1	V 1.1
IO-Link SIO mode support	yes	yes
IO-Link min. cycle time	4 ms	4 ms
Smart Sensor Profil	-	-
operating temperature	+5°C to +60°C	+5°C to +60°C
storage temperature	-40°C to +85°C	-40°C to +85°C
weight	190 g	280 g
response time	5.1 ms	6 ms
delay prior to availability	< 300 ms	< 300 ms
order number	**bks+3/FIU**	**bks+6/FIU**
switching output	Push-Pull, U_B-3 V, -U_B+3 V, I_{max} = 100 mA,	Push-Pull, U_B-3 V, -U_B+3 V, I_{max} = 100 mA,
	NOC/NCC adjustable, short-circuit-proof	NOC/NCC adjustable, short-circuit-proof
analogue output	current output 4–20 mA; voltage output 0–10 V,	current output 4–20 mA; voltage output 0–10 V,
	short-circuit-proof, switchable rising/falling	short-circuit-proof, switchable rising/falling

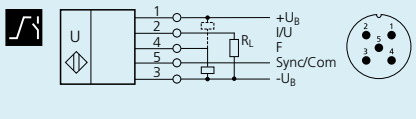

1 Push-Pull and 1 analogue output

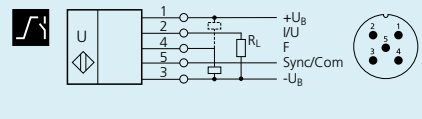

1 Push-Pull and 1 analogue output

bks

The bks edge sensor facilitates the contact-free web edge scanning of foils, paper and other sound-impermeable materials.

HIGHLIGHTS

- Compact design with only 30 mm fork width
- 0.025 mm resolution
- 0.1 mm relative accuracy
- 4 ms response time
- 8 mm working range

BASICS

- Contact-free detection of the path edge
- Analogue output 4–20 mA and 0–10 V
- 3 LEDs and 1 button on the top of the housing
- Parameterisable with LinkControl
- Robust metal housing › for harsh usage conditions

The bks ultrasonic edge sensor

is a fork sensor for scanning the edges of sound-impermeable materials such as foil or paper.

This is why the bks is ideally suited for the web control of highly transparent foils, light-sensitive materials, materials with greatly varying transparency and paper subject to high paper dust loads.

The functional principle

The fork's lower leg is equipped with an ultrasonic transmitter which cyclically emits short sound impulses, which are detected by the ultrasonic receiver arranged in the upper fork leg. Material passing through the fork covers this sound path and thus attenuates the receiving signal depending on the coverage, which is evaluated by the internal electronics.

An analogue signal is output depending on the degree of coverage.

The analogue output can both deliver voltage 0–10 V as well as current 4–20 mA.

The operating range amounts to 8 mm (±4 mm).

Via the Teach-in button

on the edge sensor's top, the zero position of the edge to be controlled is set.

There are two options for calibration:

- completely freeing the fork from the sheeting,
- pressing the button for approx. 3 seconds until the two yellow LEDs flash alternately. Ready.

  Or
- aligning the web edge inside the fork with the two marks to ensure a 50% coverage of the sound path,
- then pressing the button for approx. 10 seconds until the two yellow LEDs remain lit. Ready.

The bks edge sensor has a fork width of 30 mm and a fork depth of 33 mm. Other fork widths and depths are available upon request.

The housing side is equipped with two consistent bores for the edge sensor's mounting. The electrical connection is established via an M12 circular connector.

Three LEDs

indicate the position of the sheeting inside the fork. For use with of light-sensitive materials, the LEDs can also be switched off.

The bks is preset and immediately ready for operation. Optionally, it can also be comprehensively parameterised with the help of the LinkControl adapter LCA-2 and LinkControl software (see the chapter "Accessories").

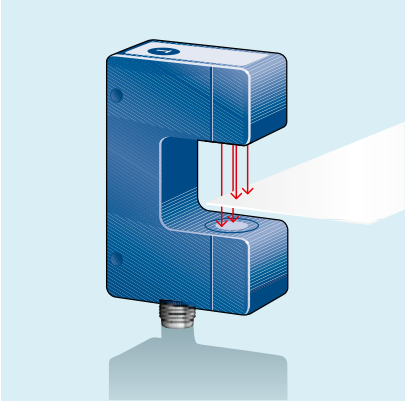

With a fork width of only 30 mm and a depth of 33 mm, it has a very compact design. Its working range of 8 mm and its high accuracy of 0.1 mm permit a wide variety of applications.

	bks-3	bks-6
	bks-3/CIU	**bks-6/12/CIU**

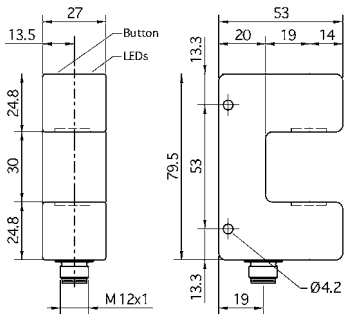

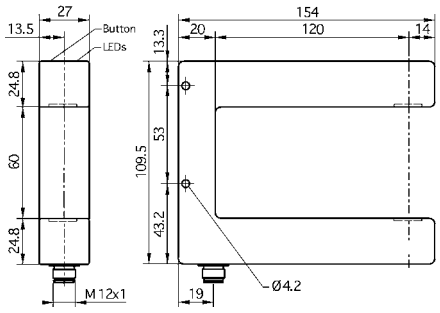

blind zone	7 mm in front of transmitter and receiver	7 mm in front of transmitter and receiver
fork width	30 mm	60 mm
fork depth	33 mm	134 mm
transducer frequency	200 kHz	200 kHz
resolution/sampling rate	0.025 mm	0.025 mm
reproducibility	± 0.1 mm at constant ambient conditions	± 0.1 mm at constant ambient conditions
working range	8 mm (± 4 mm)	8 mm (± 4 mm)
operating voltage U_B	20 V to 30 V DC, reverse polarity protection	20 V to 30 V DC, reverse polarity protection
no-load current consumption	≤ 50 mA	≤ 50 mA
housing	anodised aluminium	anodised aluminium
	ultrasonic transducer: polyurethane foam, epoxy resin with glass content	ultrasonic transducer: polyurethane foam, epoxy resin with glass content
class of protection according to EN 60529	IP 65	IP 65
type of connection	5-pin M12 initiator plug	5-pin M12 initiator plug
controls	push-button	push-button
scope for settings	• Teach-in via push-button	• Teach-in via push-button
	• LCA-2 with LinkControl	• LCA-2 with LinkControl
indicators	LED green: centre position,	LED green: centre position,
	2 LEDs yellow: deviation from centre position	2 LEDs yellow: deviation from centre position
operating temperature	+5°C to +60°C	+5°C to +60°C
storage temperature	-40°C to +85°C	-40°C to +85°C
weight	140 g	290 g
response time	4 ms	4 ms
delay prior to availability	< 300 ms	< 300 ms
order number	**bks-3/CIU**	**bks-6/12/CIU**
analogue output	current output 4–20 mA	current output 4–20 mA
	voltage output 0–10 V	voltage output 0–10 V
	short-circuit-proof	short-circuit-proof
	switchable rising/falling	switchable rising/falling

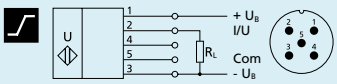

analogue output

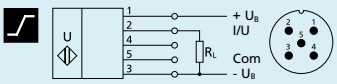

analogue output

ews

Ultrasonic through-beam sensor in different housings.

HIGHLIGHTS

- Transmitter and receiver › in miniature cubic or M18 housing
- Installation-compatible with many light barriers › a true alternative for critical applications
- Up to 500 Hz switching frequency › for fast sampling

BASICS

- 1 switching output in pnp variant
- microsonic Teach-in using a button
- Working distance between the transmitter and the receiver selectable from 10 to 2,500 mm
- 20–30 V operating voltage

Ultrasonic through-beam barrier ews

for contact-free detection of objects specially in the most diverse applications e.g. with bottles or plastic foils. The through-beam sensor ews is available as a cuboid miniature housing and a cylindrical M18 housing. The ews family covers a working range of 10 mm to 2,500 mm.

A through-beam barrier

consists of two constructively-identical units which are operated as a transmitter and a receiver. The two units recognize whether they are intended to work as a transmitter or a receiver via the control input. If pin 2 $+U_B$ is activated, this unit functions as a transmitter.

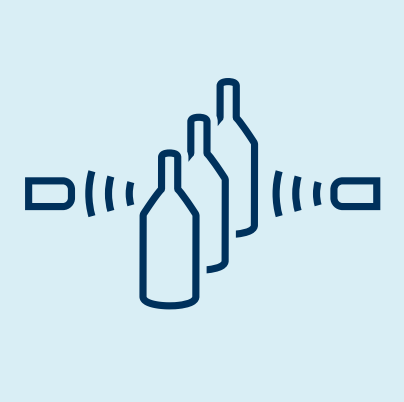

The functional principle ultrasonic through-beam barrier

The functional principle

one through-beam sensor ews, set as transmitter, sends cyclic sound impulses, received by another one, set as receiver. If an object interrupts the pulses between the transmitter and the receiver, the switching output of the receiver is set.

microsonic Teach-in

The Teach-in button on the top of the cubic through-beam barrier ews-15/CD allows for a convenient configuration of the response time and the output function of the switching output of the receiver. With the Teach-in procedure the response time and an off-delay of 6.9 ms can be set. At the through-beam barrier in the M18 housing, response time and output function can be set via the Teach-in procedure at pin 2.

Two LEDs

show the operating state and the state of the switching output of the receiver.

	ews-15	ews-15
	ews-15/CD Set	**ews-15/M18/CD Set**
	2 x 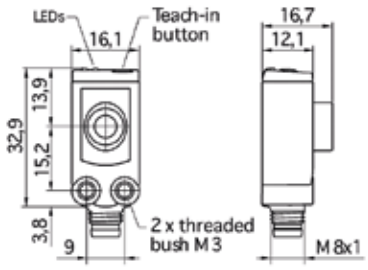	2 x 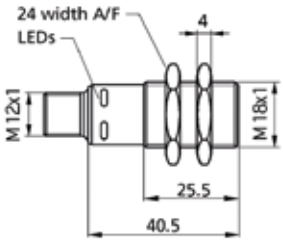
transmitter/receiver spacing	50 – 250 mm	10 – 150 mm
transducer frequency	380 kHz	380 kHz
operating voltage U_B	20 to 30 V DC, reverse polarity protection	20 to 30 V DC, reverse polarity protection
voltage ripple	± 10 %	± 10 %
no-load current consumption	≤ 30 mA	as emitter ≤ 45 mA
		as receiver ≤ 25 mA
housing	ABS	PBT
	ultrasonic transducer: polyurethane foam,	ultrasonic transducer: polyurethane foam,
	epoxy resin with glass content	epoxy resin with glass content
class of protection according to EN 60529	IP 67	IP 67
type of connection	4-pin M8 initiator plug	4-pin M12 initiator plug
controls	1 push-button	control input
scope for settings	Teach-in via push-button	Teach-in via control inputs on pin 2
indicators	LED green (transmitter and receiver: working),	LED green (transmitter and receiver: working),
	LED yellow (only receiver: switch status)	LED yellow (only receiver: switch status)
operating temperature	-25°C to +70°C	-25°C to +70°C
storage temperature	-40°C to +85°C	-40°C to +85°C
weight	2 x 8 g	2 x 15 g
switching frequency	400 Hz, with activated filter 80 Hz	500 Hz, with activated filter 125 Hz
response time	2.3 ms, with activated filter 6.9 ms	2 ms, with activated filter 6 ms
delay prior to availability	< 300 ms	< 300 ms
order number	**ews-15/CD Set**	**ews-15/M18/CD Set**
switching output	pnp, U_B-2 V, I_{max} = 200 mA	pnp, U_B-2 V, I_{max} = 200 mA
	NOC/NCC adjustable, short-circuit-proof	NOC/NCC adjustable, short-circuit-proof
	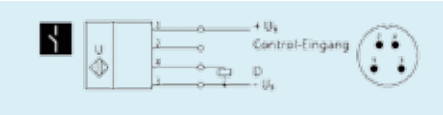	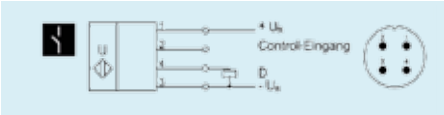
	1 pnp switching output	1 pnp switching output

ews-25	ews-100	
ews-25/M18/CD Set	**ews-100/M18/CD Set**	
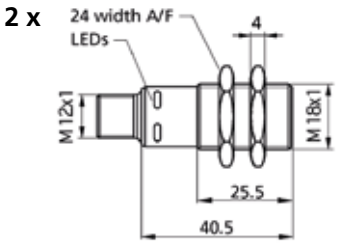	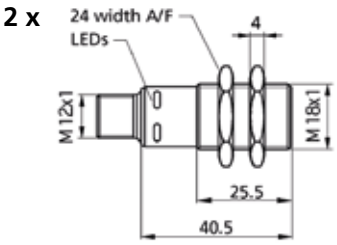	
10 – 400 mm	100 – 2,500 mm	
320 kHz	200 kHz	
20 to 30 V DC, reverse polarity protection	20 to 30 V DC, reverse polarity protection	
± 10 %	± 10 %	
as emitter ≤ 45 mA	as emitter ≤ 50 mA	
as receiver ≤ 25 mA	as receiver ≤ 25 mA	
PBT	PBT	
ultrasonic transducer: polyurethane foam,	ultrasonic transducer: polyurethane foam,	
epoxy resin with glass content	epoxy resin with glass content	
IP 67	IP 67	
4-pin M12 initiator plug	4-pin M12 initiator plug	
control input	control input	
Teach-in via control inputs on pin 2	Teach-in via control inputs on pin 2	
LED green (transmitter and receiver: working),	LED green (transmitter and receiver: working),	
LED yellow (only receiver: switch status)	LED yellow (only receiver: switch status)	
-25°C to +70°C	-25°C to +70°C	
-40°C to +85°C	-40°C to +85°C	
2 x 15 g	2 x 15 g	
500 Hz, with activated filter 125 Hz	200 Hz, with activated filter 50 Hz	
2 ms, with activated filter 6 ms	5 ms, with activated filter 15 ms	
< 300 ms	< 300 ms	
ews-25/M18/CD Set	**ews-100/M18/CD Set**	
pnp, U_B-2 V, I_{max} = 200 mA	pnp, U_B-2 V, I_{max} = 200 mA	
NOC/NCC adjustable, short-circuit-proof	NOC/NCC adjustable, short-circuit-proof	
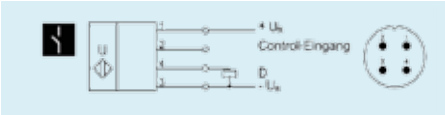	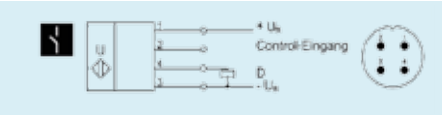	
1 pnp switching output	1 pnp switching output	

LCA-2

The LCA-2 facilitates the convenient setting of numerous microsonic sensor series (“nice to have”).

HIGHLIGHTS

› Three-digit digital display › for the display of measured distance values in mm or cm

› TeachBox with four-button operation › for programming of the sensor without a PC

› LinkCopy function › for copying the sensor settings from one sensor to another without a PC

› Uniform microsonic Teach-in for all microsonic sensors › to keep easy things easy

BASICS

› Handy adapter › for the programming of ultrasonic sensors

› USB interface › for connecting to a PC

› T plug › to insert the adapter between the connector cable and the sensor

› LinkControl software › free download of the current version available on the Internet

› Backwards-compatible › so sensors that have been in the field for a long time can still be programmed

› Future-proof › since the LinkControl adapter will also support future generations of sensors

The LinkControl adapter LCA-2

is equipped with a USB interface for connecting to a PC or laptop.

With the LinkControl software

the ultrasonic sensors of the mic+, mic, pico+, lpc+, lcs+, lcs, ucs, pico+TF, crm+, hps+, pms, bks+, bks, dbk+, esp and esf series can be parameterised under Windows®.

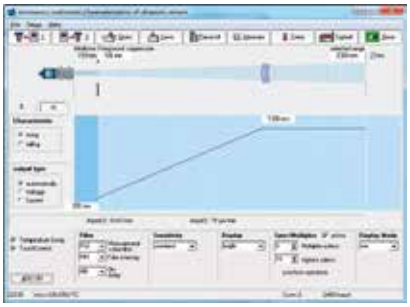

LinkControl software: input mask

The current measurement values

of the ultrasonic sensors can be graphically visualised with the LinkControl software in the form of three different output graphics.

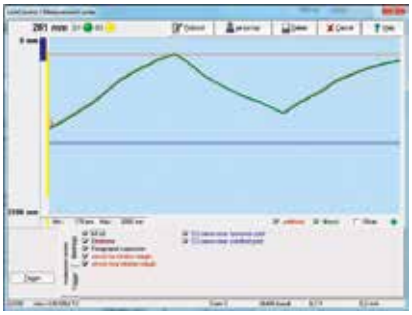

LinkControl software: measurement plotter

The LinkCopy function

allows parameters to be downloaded from the sensor to the LCA-2 and the subsequent upload of these parameters to a different sensor. This way, sensor settings can be conveniently copied from one sensor to another.

Offline programming within LinkCopy

With some sensor series, the sensor settings copied to the LCA-2 can be directly indicated and edited via the digital display before being written back into a sensor.

For the LinkCopy function, the Link-Control adapter need not be connected to a PC. The LCA-2 reads the parameters out of the sensor and saves them internally to its EEPROM. The data are thus safely stored in the LinkControl adapter even after disconnecting the power supply and can consequently also be used as a sensor setting archive.

Via the integrated TeachBox,

all ultrasonic sensors which are taught via pin 5 at the sensor plug (mic, pico+, lpc, lcs and esf-1) can be conveniently set. The Link-Control adapter LCA-2 is looped between the sensor connection line and the sensor; a PC or laptop is not required. During the Teach-in process via buttons T1 and T2, the length of the button stroke is indicated in seconds on the display.

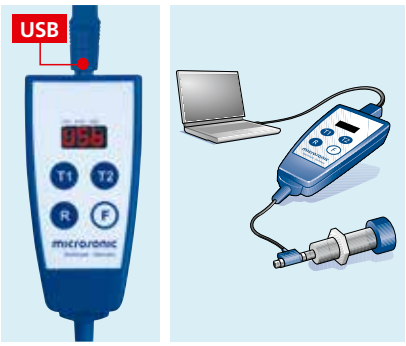

USB interface for PC connection

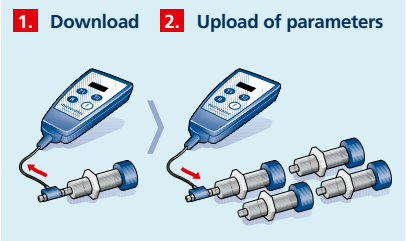

LinkCopy: copying of sensor settings

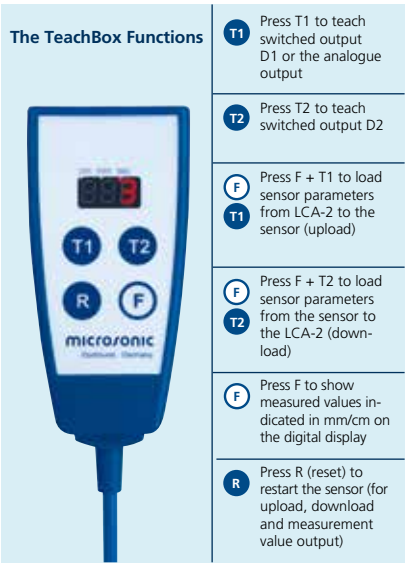

The TeachBox

Order number: LCA-2

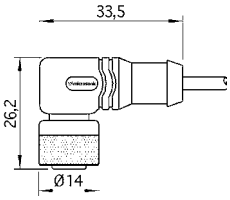

KST4A-2/M12

4-pole cable box M12, angled,

with 2 m PVC cable, 4 x 0.25 mm²

KST4A-5/M12

4-pole cable box M12, angled,

with 5 m PVC cable, 4 x 0.25 mm²

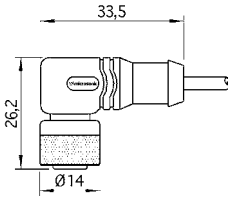

KST5A-2/M12

5-pole cable box M12, angled,

with 2 m PVC cable, 5 x 0.25 mm²

KST5A-5/M12

5-pole cable box M12, angled,

with 5 m PVC cable, 5 x 0.25 mm²

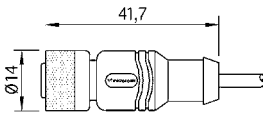

KST4G-2/M12

4-pole cable box M12, straight,

with 2 m PVC cable, 4 x 0.25 mm²

KST4G-5/M12

4-pole cable box M12, straight,

with 5 m PVC cable, 4 x 0.25 mm²

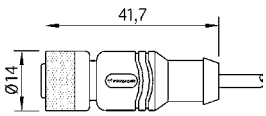

KST5G-2/M12

5-pole cable box M12, straight,

with 2 m PVC cable, 5 x 0.25 mm²

KST5G-5/M12

5-pole cable box M12, straight,

with 5 m PVC cable, 5 x 0.25 mm²

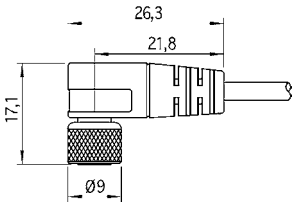

KST4A-2/M8

4-pole cable box M8, angled,

with 2 m PVC cable, 4 x 0.25 mm²

KST4A-5/M8

4-pole cable box M8, angled,

with 5 m PVC cable, 4 x 0.25 mm²

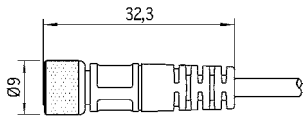

KST4G-2/M8

4-pole cable box M8, straight,

with 2 m PVC cable, 4 x 0.25 mm²

KST4G-5/M8

4-pole cable box M8, straight,

with 5 m PVC cable, 4 x 0.25 mm²

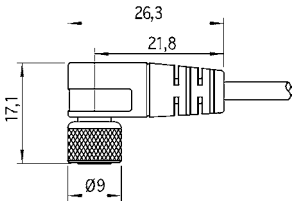

KST3A-2/M8

3-pole cable box M8, angled,

with 2 m PVC cable, 3 x 0.25 mm²

KST3A-5/M8

3-pole cable box M8, angled,

with 5 m PVC cable, 3 x 0.25 mm²

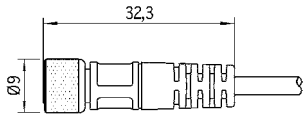

KST3G-2/M8

3-pole cable box M8, straight,

with 2 m PVC cable, 3 x 0.25 mm²

KST3G-5/M8

3-pole cable box M8, straight,

with 5 m PVC cable, 3 x 0.25 mm²

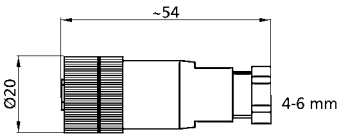

STG4/M12

4-pole cable box, straight,

for individual assembly

STG5/M12

5-pole cable box, straight,

for individual assembly

View on cable box
KST3 … /M8 KST4 … /M8

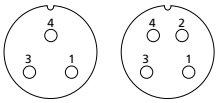

- Pole 1: brown
- Pole 2: white
- Pole 3: blue
- Pole 4: black

View on cable box
KST4 … /M12 KST5 … /M12

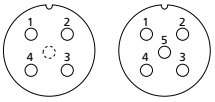

- Pole 1: brown
- Pole 2: white
- Pole 3: blue
- Pole 4: black
- Pole 5: grey

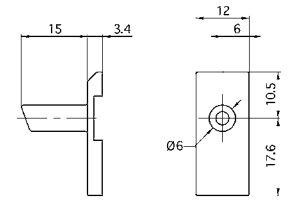

SoundPipe zws1

Attachment dome for zws-15 and zws-7 sensors

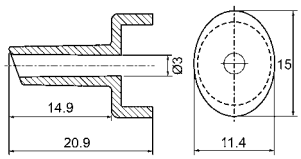

SoundPipe sks1

Attachment dome for sks sensors

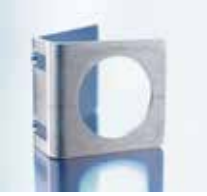

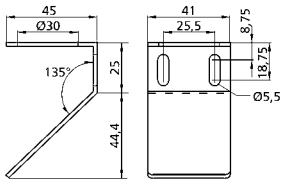

UF-90/M30

Beam deflector for ultrasonic sensors with up to 1.3 m operating range in M30x1.5 threaded sleeves

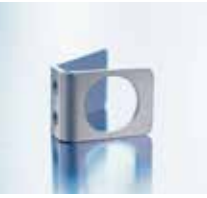

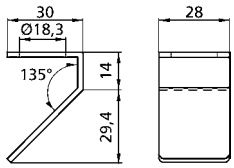

UF-90/M18

Beam deflector for ultrasonic sensors with up to 0.35 m operating range in M18x1 threaded sleeves

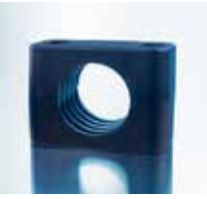

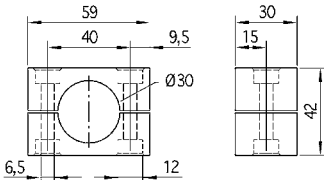

BF-30

Fastening clamp for sensors with M30 threaded sleeve, material PA

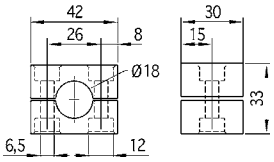

BF-18

Fastening clamp for sensors with M18 threaded sleeve, material PA

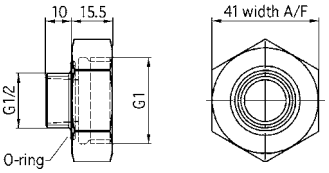

G1_G1/2 reducer piece

For mounting of hps+25 sensors with G1 process connection in an existing G1/2 hole

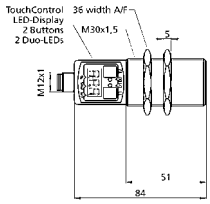

SyncBox1

For the external synchronisation of more than ten mic+ sensors: approx. 160 mic+ sensors can be synchronised

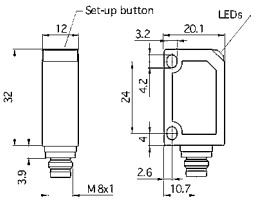

SyncBox2

For the external synchronisation of zws sensors: about 50 zws sensors can be synchronised

Turning an idea into full-scale production ... the systematic way

Customer's telephone inquiry

Acceptance of task – on-site

Feasibility study and functioning sample

Presentation of test set-up and results

Delivery of further functioning sample, testing by the customer

Drawing up product specification

Initial meeting

Ongoing development to customer's specification

Delivery of first sample

01 02 03 04 05 06 07 08 09 10 11 12 13 14

"Is everything that is conceivable also technically feasible?"

microsonic prefers to answer this question by way of practical examples. What that means is together with you, in a constant exchange and directly on-site. The development of solutions to customers' specifications for special applications, requirements or installations is quite often technical necessity – and at the same time the expression of what we at microsonic understand as "focusing on the customer".

The starting point for an individual development can be an inquiry about a different, tailor-made housing for a sensor, modified output signal or evaluation logic that must be altered because in its present form it does not fit with your specific conditions or design.

And there is also the case where you wish to know whether it is even possible to solve your task with an ultrasonic sensor at all. We are happy to answer this question, too. To realise your ideas and conceptions, we follow a systematic path. First, we analyse your particular task or problem and the technical options, and then show you specific solutions.

In this way, we can clarify right at the outset which sensor or which system is the most cost-effective – and hence profitable – for your application. From the prototype to large-scale production, you are always involved and kept well informed.

So, put us to the test! We look forward to your inquiry.

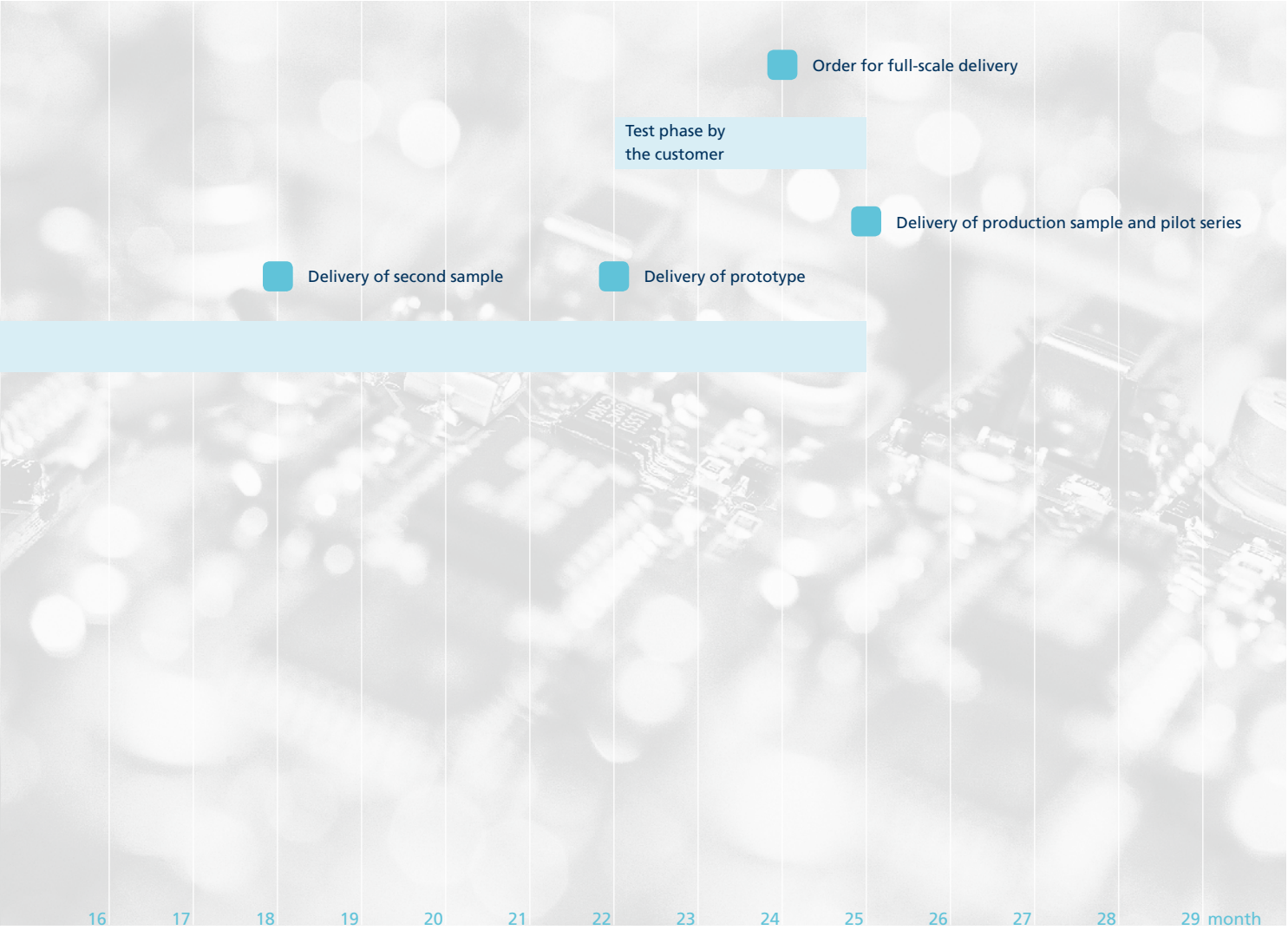

Across the globe, competent staff and sales partners are available to help you.

Germany

Headquarters, worldwide operations
microsonic GmbH
Phoenixseestraße 7
44263 Dortmund
T +49 231 97 51 51 -0
W microsonic.de
E info@microsonic.de

Europe

Austria
Balluff GmbH
Industriestrasse B 16
2345 Brunn am Gebirge
T +43 2236 32 52 1 -0
W balluff.at
E sensor@balluff.at

Belgium, Luxembourg
Sensor Partners BVBA
Z. 1 Researchpark 310
1731 Zellik
T +32 2 464 96 90
W sensors.be
E info@sensors.be

Czech Republic
OEM Automatic, spol. s r.o.
Pražská 239
250 66 Zdiby
T +420 2 41 48 49 -40
W oem-automatic.cz
E info@oem-automatic.cz

Denmark
Bennike + Wander A/S
Haandvaerkerbyen 57
2670 Greve
T +45 43 90 80 00
W bennike-wander.dk
E bewael@bewael.dk

Finland
HEMOMATIK OY
Meteorinkatu 3
02210 Espoo
T +358 9 8 03 73 37
W hemomatik.fi
E hemomatik@hemomatik.fi

France
microsonic GmbH
Pascal Kraszewski
T +33 7 81 00 50 28
W microsonic.fr
E pascal.kraszewski@microsonic.fr

Greece
SIGMA HELLAS LTD
98B Filonos Street
18536 Piraeus
T +30 21 04 52 27 45
W sigmahellas.gr
E sales@sigmahellas.gr

Hungary
OEM Automation Kft.
Gyár u. 2.
2040. Budaörs
T +36 23 880 895
W oemautomatic.hu
E info@oemautomatic.hu

Italy
Balluff Automation s.r.l.
Via Morandi, 4
10095 Grugliasco (Torino)
T +39 01 13 15 07 11
W balluff.it
E info.italy@balluff.it

Netherlands
Sensor Partners BV
James Wattlaan 15
5151 DP Drunen
T +31 416 37 82 39
W sensor.nl
E info@sensor.nl

Norway
Primatec as
Østerskogen 53
4879 Grimstad
T +47 37 25 87-00
W primatec.no
E post@primatec.no

Poland
OEM AUTOMATIC Sp.z o.o.
ul. Dzialkowa 121 A
02-234 Warszawa
T +48 22 863 27 22
W oemautomatic.com.pl
E info@pl.oem.se

Russia
OOO KIP-SERVIS
145/1, Mitrofana Sedina Street
350000 Krasnodar
T +7 861 255 97 54
W kipservis.ru
E iis@kipservis.ru

Slovak Republic
OEM Automatic, spol. s r. o.
Bratislavská 8356
917 01 Trnava
T +421 332 400 160
E info@oem-automatic.sk

Sweden
HEMOMATIK AB
Länna, Nyckelvägen 7
14250 Skogås
T +46 8 7 71 02 20
W hemomatik.se
E info@hemomatik.se

Switzerland
Balluff Sensortechnik AG
Keltenstrasse 49
2564 Bellmund
T +41 32 3 66 67-57
W balluff.ch
E sensortechnik@balluff.ch

Spain
INTERTRONIC INTERNACIONAL, S.L.,
Parque Tecnológico Paterna,
C/ Johannes Gutenberg, 4 y 6
46980 Valencia
T +34 9 02 51 00 10
W intertronic.es
E info@intertronic.es

Turkey
YORUM OTOMASYON MALZEMELERI
SAN. VE TIC. A.S.
Mehmet Akif Mah. Aziz Bulvari,
Yilmaz Bey Plaza No:2 K:2 D:3
34774 Umraniye/Istanbul
T +90 216 364 69 69
W yorumotomasyon.com.tr
E yorum@yorumotomasyon.com.tr

United Kingdom
Balluff Ltd. The Automation Centre
20 Cheshire Business Park,
Cheshire Avenue
CW9 7UA Lostock Gralam, Northwich
T +44 16 06 81 27 77
W balluff.co.uk
E sales@balluff.co.uk

Global

Argentina
SILGE ELECTRONICA S.A.
Avenida Mitre 950
B1604AKN Florida (Buenos Aires)
T +54 11 47 30 -10 01
W silge.com.ar
E gharf@silge.com.ar

Australia
Balluff Pty Ltd
Unit 25/18 Malvern Street
3153 Bayswater, VIC
T +61 3 97 20 41 00
W balluff.com.au
E grahamm@balluff.com.au

Brazil
Sense Eletronica Ltda.
Rua Tuiuti, 1237, Tatuapé
03081-000 São Paulo
T +55 11 21 45 04 18
W sense.com.br
E jeferson@sense.com.br

Canada/USA
TR Electronic Inc.
955 Green Valley Rd.
N6N 1E4 London, ON
T +1 519 45 2- 19 99
24/7 support line +1 800 265 -9483
W trelectronic.com
E customercare@trelectronic.com

Chile/Bolivia
Electrónica Rhomberg Ltda.
Av. Ricardo Lyon 1468
751-0585 Providencia, Santiago de Chile
T +56 2 599 69 00
W rhomberg.cl
E ventas@rhomberg.cl

China
Suzhou Controlway Electric Co., Ltd.
3F, Building 3, No. 892, Wusong Road,
Wuzhong District, Jiangsu Province
215022 Suzhou
T +86 512 88 99 85 86
W controlway.cn
E sales@controlway.cn

Iran
ARIACABLE CO., Ltd.
No. 6, Grand Floor, Tejarat Passage
South Lalehzar Street
1144834669 Tehran
T +98 21 88 89 92 36 -7
W ariacable.com
E info@ariacable.com

Israel
Medital Vision Ltd.
36 Shacham St. P.O. Box 7772
Petach Tikva 4951729
T +972 73 2 00 02 00
W medital.co.il
E vision@medital.co.il

Japan
TAKEDA TRADE Co., Ltd. Tokyo office
3F 5-6-10 Ueno, Taito-ku
Tokyo (110-0005)
T +813 68 06- 07 57
W takeda-trade.co.jp
E mail@takeda-trade.co.jp

Korea
Mahani Electric Co., Ltd.
792-7 Yeoksam-Dong, Kangnam-Gu
135-080 Seoul
T +82 2 21 94 -33 00
W mec.co.kr
E yskim@mec.co.kr

New Zealand
Carrel Electrade Limited
P.O. Box 11-078 Ellerslie 1542
Auckland 3
T +64 9 5 25 17 -53
W carrel-electrade.co.nz
E sales@carrel-electrade.co.nz

Peru
EPLI S.A.C.
Jr. Tarapoto 1157
(Alt. cuadra 11 Av. Tingo María)
Lima (Breña)
T +51 13 30 15 -95
W epli.com.pe
E info@epli.com.pe

Singapore
Precision Technologies Pte Ltd.
211 Henderson Road #13-02
Henderson Industrial Park
159552 Singapore
T +65 62 73 45 73
W pretech.com.sg
E milaero5@pretech.com.sg

South Africa
Motion Tronic cc
Unit 15 Nutwood Industrial Park
144 Brackenhill Road
Waterfall
T +27 31 701-1620
W motiontronic.co.za
E b.douglas@motiontronic.co.za

Taiwan
DAYBREAK INTERNATIONAL CORP.
3F., 124 Chung-Cheng Road
Shihlin, Taipei
T +886 2 88 66 12 -34
W daybreak.com.tw
E day111@ms23.hinet.net

microsonic

UNSER
HERZ
SCHALLT
ULTRA.

microsonic GmbH
Phoenixseestraße 7 / 44263 Dortmund / Germany
T +49 231 975151-0 / **F** +49 231 975151-51 / **E** info@microsonic.de / **W** microsonic.de

Details regarding scope of supply, appearance, performance, options, dimensions and weights were correct at the time of going to press. Subject to modifications. Last updated: 11/2018